TIMBERLAKE
CABINETRY



Specification Guide

MAY 2025

Timberlake Specification Guide

Here is your guide to the latest product additions and enhancements we've made to our Portfolio Select, Portfolio,and Value Built Series line of fine cabinets. If you would like further clarification about any of our products or processes, please call Timberlake Customer Care at 800-967-9674.

Parts Directory

The Parts Directory is included in the back of this guide.

Continuous Improvement

In keeping with our policy of continuous product refinement, Timberlake reserves the right to change specifications in design and materials as conditions require.

What's New?

The color green is used to highlight items that are newly available or modified in the Timberlake product offering. All of these items are color-coded green for easy identification and include:

New Finishes

- Maple Cider finish available on all Maple door styles
- Painted Oat finish available on all Painted door styles

Glaze Finish Change

- Painted Glaze finishes are now broken into their own pricing category

New Construction Option

- Void Toe Kick Option is available for most cabinets with a toe kick

Range Hood Redesign

- Artisan Range Hood now ships with (1) Contemporary Trim Molding (CLTM8), new nomenclature RH__ AWM
- Sloped Range Hood now ships with (1) Contemporary Trim Molding (CLTM8), new nomenclature RH__ SLWM

Base Cabinet Expansion

- 12" Base Tray Divider Pull-Out Cabinet: BTDP12 CC
- Sink Bases with Sink Base Mats: SB30 BUTT SBMAT, SB33 BUTT SBMAT, SB36 BUTT SBMAT, SB39 SBMAT, SB30 BUTT STO SBMAT, SB33 BUTT STO SBMAT, SB36 BUTT STO SBMAT, SB39 STO SBMAT

Base Accessory Expansion

- Standard Height Drawer Adjustable Divider Kit (for upgraded CCDW drawers): ADIK15/18, ADIK21/24, ADIK27/30, ADIK33/36

Decorative Accessory Expansion

- Classic Corbels: CLC29, CLC212
- Era Corbels: ERC49, ERC312
- Large Decorative Legs: PDL5, CDL5, BSQL5
- Aria Leg and Foot: ARDL, ARDF
- Era Leg and Foot: ERDL, ERDF
- Metal Corbels in Brushed Gold Finish: METAL COVE 212 BG, METAL EMERSON 27 BG
- Coat Hooks in Brushed Gold and Matte Black Finishes: HOOK MB, HOOK BG

Panel Expansion

- ½" Finished Plywood: WFP4834, WFP9634

Touch-Up Materials & Installation Items

- Table Skirt Furniture Bracket: TSFB
- Simplified Putty Stick and Touch-Up Markers nomenclatures: PUTTY STICK EXTERIOR, TU MARKER EXTERIOR, TU MARKER EXT GLAZE

New Door Style *ADDED JULY 2025*

- Madera collection is a slim shaker available as a slab drawer front or a 5-piece drawer front - available in all Maple and most Painted finishes

Discontinued

- Cherry Slate
- Maple Cognac
- Duraform Drift
- Duraform Breeze
- All Duraform Textured Accessories (BTK8 DT, _EP_ DT, FS__ DT, _OF__ DT, WP__ DT, S3S__ DT, WWEP____ DT, WBEP__ DT, DWTEP__ DT)
- Pantry Cabinet with Door Storage (UT3624 X __ PCDS BUTT, UT3624 X __ PCDS BUTT SD)
- Door Storage Accessories (PCSK36, PDSK18, PK36, PSK36, CLIP PILASTER, PDSK18 SHELF, S369)
- Tri-View Cabinet (TV__30)
- Parker Furniture Leg (PFL)
- Chantilly Furniture Leg (CFL)
- Accent Full-Turned Foot (ATF-FR)
- Rosette Corbels (RC36, RC49, RC313)
- Finley Corbels (FC36, FC49, FC312)
- Cove Corbels (CC26, CC36)
- Valencia Corbel (VC36, VC49, VC312)
- Crown Valances (V60 CR, V72 CR)
- Flat Panel Valance (V60 FP, V66 FP, V72 FP)
- Raised Panel Valance (V60 RP, V66 RP, V72 RP)
- Decorative Blocks (FB3X4 PLINTH, FB3X3 ROSETTE, FB6X6 PLINTH, BB3X3 ROSETTE)
- Base Column Fillers (BBC32734, BFC32734)
- Tall Column Fillers (TBC32784, TBC32796, TFC32784, TFC32796)
- Wall Column Fillers (WBC31530, WBC31542, WBC31560, WFC31530, WFC31542, WFC31560)
- Metal Corbels in Polished Chrome (METAL COVE 212 PC, METAL EMERSON 27 PC)
- Coat Hook in Polished Chrome (HOOK PC)

TABLE OF CONTENTS

Door Styles

Portfolio Select® Series Collections ... 4
Features, Options, Availability ... 5
Charleston ... 6
New Haven ... 7
New Haven with Drawer Front Option ... 7
Sierra Vista ... 8
Windsor ... 9
Windsor with Drawer Front Option ... 9
Portfolio® Series Collections ... 10
Features, Options, Availability ... 11
Barnett ... 12
Beckley ... 13
Corban ... 14
Corban with Drawer Front Option ... 14
Downing ... 15
Kinsdale ... 16
Lausanne ... 17
Maddox ... 18
Maddox with Drawer Front Option ... 18
Madera ... 19
Madera with Drawer Front Option ... 19
Sonoma ... 20
Sonoma with Drawer Front Option ... 20
Value Built® Series Collections ... 21
Features, Options, Availability ... 21
Canton ... 22
Fairfield ... 23

Standard Cabinet Specifications ... 25

Certification ... 26
Cabinet Specifications ... 27
Finishing Systems ... 28
Door Species & Characteristics ... 29
Wall Cabinet Construction ... 30
Base Cabinet Construction ... 31
Cabinet Dimensions ... 32
Hardware ... 35
Ceiling Height Requirements ... 36
Installed Height Guidelines ... 37
Overlay Dimensions ... 39

Construction Options ... 41

Legend ... 42
Premium Finish Cabinet Option ... 43
All Plywood Construction ... 44
Plywood Ends Option ... 44
Accessible Height Option ... 45
Construction Comparison ... 46
CushionClose Hinge Option ... 46
Full-Access Drawer Option ... 46
CushionClose Drawer Option ... 46
CushionClose Deep Dovetail Sliding Shelf Option ... 46
Reduced Depth Option ... 47
Increased Depth Option ... 48
Cabinet Front Only Option ... 48
Furniture Ends Option ... 49
Inverted Frame Option ... 49
Recessed Toe Kick Option ... 50
Full Depth Shelf Option ... 50
Matching Interior Option ... 51
Void Door Option ... 52
Void Top Drawer Option ... 52
Specialty Door Options ... 53
Specialty Door Availibility ... 53
Specialty Door Offering by Style ... 54
Open Frame Door Profiles ... 55
Mullion Frame Door Profiles ... 56
Glass Inserts ... 58
Decorative Glass Clips ... 59

Wall Cabinet ... 61

Standard ... 62
With Spice Rack ... 64
Wall Top Hinge ... 64
Microwave ... 65
Blind ... 66
Corner ... 68
Wall End Angle ... 69
Specialty ... 70
Range Hoods ... 73
Accessories ... 79

Base Cabinets ... 83

One Door Base Cabinets ... 84
One Door Base With Sliding Shelves ... 84
One Door Base With Accessories ... 84
One Door Base With Factory Installed Drawer Organizer ... 86
Two Door Base Cabinets ... 87
Two Door Base With Sliding Shelves ... 87
Two Door Base With Accessories ... 87
Two Door Base With Factory Installed Drawer Organizer ... 88
Two Door Two Top Drawer Base Cabinets ... 89
Two Door Two Top Drawer Base Cabinets With Sliding Shelves ... 89
Three Door Base Cabinets ... 89
Three Door Base with Sliding Shelves ... 90
One Door Full-Height Base Cabinets ... 90
One Door Full-Height Base Cabinets with Sliding Shelves ... 91
One Door Full-Height Base Cabinets with Accessories ... 91
Two Door Full-Height Base Cabinets ... 92
Two Door Full-Height Base Cabinets with Sliding Shelves ... 93
Specialty Drawer Base ... 93
Two Drawer Base ... 94
Two Drawer Base With Factory Installed Drawer Organizer ... 94
Drawer Base ... 95
Drawer Base With Factory Installed Drawer Organizer ... 96
Peninsula ... 97
Full-Height Peninsula Base ... 97
Blind Peninsula Corner Base ... 98
Corner ... 99
Blind ... 102
Sink/Cooktop ... 105
Sink Base With Factory Installed Tilt-Out Tray(s) ... 106
Sink Base With Sink Base Mat ... 105
Adaptable Sink Base Kit ... 108
Sink/Cooktop Front ... 108
Specialty ... 109
Accessories ... 112

Desk Cabinets & Bookshelves ... 119

Desk Base Cabinets ... 120
Bookshelves ... 122
Accessories ... 123

Tall Cabinets ... 125

Utility Cabinets ... 126
Utility Cabinets with Adjustable Shelves ... 127
Utility Cabinets with Sliding Shelves ... 128
Oven Cabinets ... 129
Accessories ... 139

Vanity Cabinet ... 143

One Door Vanity Cabinets ... 144
Two Door Vanity Cabinets ... 144
Full-Height Vanity Cabinets ... 145
Vanity Drawer Base ... 145
Vanity Sink Base ... 146
Vanity Combo Sink Base ... 149
Adaptable Sink Base ... 151
Vanity Sink Front ... 151
Specialty ... 151
Accessories ... 152
Vanity Linen Cabinets ... 153
Vanity Linen Accessories ... 154

Molding & Decorative Accents ... 155

Moldings ... 156
Valances ... 162
Corbels ... 164
Legs and Feet ... 166
Split Post and Block ... 169

Panels, Fillers & Installation Items ... 171

Panels ... 172
Fillers ... 179
Base Toe Kick ... 184
Installation Items ... 184

Decorative Hardware ... 187

Parts Directories ... 197

Index ... 261

Warranty ... 270

Portfolio Select® Series Collections

Charleston



PAGE 6

New Haven

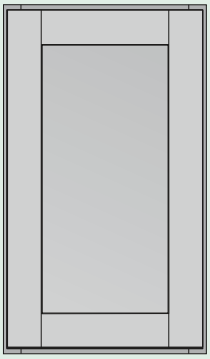

PAGE 7

Sierra Vista

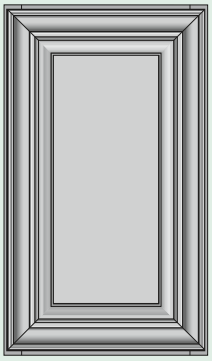

PAGE 8

Windsor

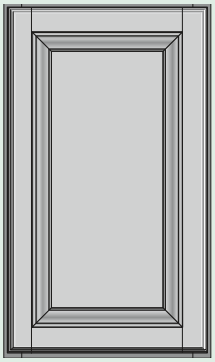

PAGE 9

Portfolio Select Series

CABINET FEATURES	
Face Frames	Hardwood and/or engineered wood ¾" x 1⅝"
Side Panels	½" Engineered Wood
Tops, Bottoms, Floors	½" Engineered Wood
Back Panel	⅛" Hardboard Substrate Captured
Toe Kick	Inset ½" Engineered Wood (unfinished)
Shelves	¾" Base and Wall Engineered Wood
Hinges	6-Way Adjustable CushionClose Hidden Hinges
Limited Warranty	5 Year

DRAWER FEATURES	
24" Deep Base **24" Deep Desk** **24" Deep Oven**	21" deep, ⅝" thick dovetail hardwood drawer and full-extension CushionClose hidden glides
21" Deep Vanity **21" Deep Desk**	18" deep, ⅝" thick dovetail hardwood drawer and full-extension CushionClose hidden glides
18" Deep Vanity	15" deep, ⅝" thick dovetail hardwood drawer and full-extension CushionClose hidden glides

CONSTRUCTION OPTIONS

- Accessible Height Option (AH)
- All Plywood Construction Option (APC)
- Cabinet Front Only Option (CFO)
- CushionClose Dovetail Sliding Shelves Option (CCSS)
- Full Depth Shelf Option (FDS)
- Furniture Ends Option (FE)
- Increased Depth Option (ID)
- Inverted Frame Option (IF)
- Matching Interior Option (MI)
- Plywood Ends Option (PE)
- Premium Finish Option
- Recessed Toe Kick Option (RTK)
- Reduced Depth Option (RD)
- Void Door Option (VDO)
- Void Top Drawer Option (VTD)
- **Void Toe Kick Option (VTK)**

SPECIALTY DOOR OPTIONS

- Mullion Frame Door Option (MFD)
- Open Frame Door Option (OFD)

SPECIES/FINISH AVAILABILITY BY COLLECTION

Finish:	Charleston	New Haven	Sierra Vista	Windsor
Cherry Amber	■	■	■	■
Cherry Clove	■	■	■	■
Maple Almond	■	■	■	■
Maple Cider	■	■	■	■
Maple Latte	■	■	■	■
Maple Rye	■	■	■	■
Maple Slate	■	■	■	■
Maple Truffle	■	■	■	■
Painted Black*	■	■	■	■
Painted Boulder*	■	■	■	■
Painted Harbor*	■	■	■	■
Painted Linen*	■	■	■	■
Painted Mist*	■	■	■	■
Painted Navy*	■	■	■	■
Painted Oat*	■	■	■	■
Painted Sage*	■	■	■	■
Painted Stone*	■	■	■	■
Painted Vanilla*	■	■	■	■
Painted Biscotti Glaze**	■		■	■
Painted Ember Glaze**	■		■	■
Painted Pewter Glaze**	■		■	■

*Premium Finish

**Premium Glaze Finish

Charleston

NEW! FINISHES

Charleston

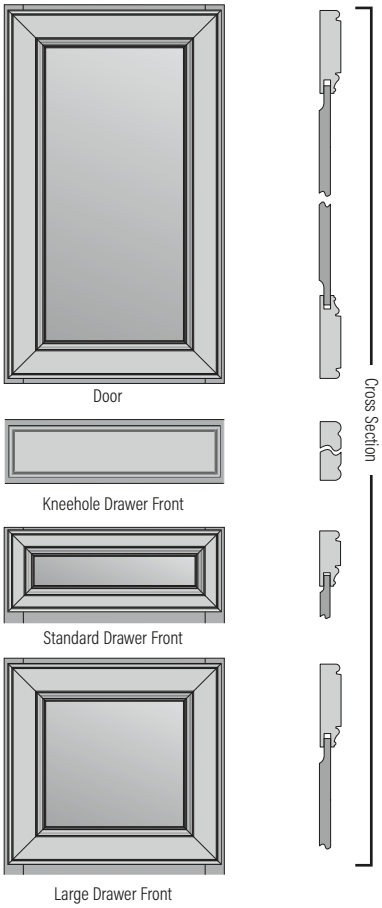

Door Style Details

Door Description:	Mitered with Recessed Panel
Door Rail & Stile Width:	3"
Drawer Description:	Mitered 5-Piece with Recessed Panel
Overlay	Full Overlay (FOL)
Tall Door Details:	No Center Rail on 50" High Doors
Decorative Hardware:	Required
Specialty Doors	OFD (See page 53 for details)

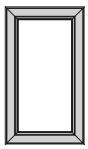

OFD

Available Finishes

CHERRY	FINISH	CHARLESTON
	Amber	54CFS
	Clove	54CTS
MAPLE	**FINISH**	**CHARLESTON**
	Almond	54GGS
	Cider	**54MUS**
	Latte	54GAS
	Rye	54MTS
	Slate	54GES
	Truffle	54MBS
PAINTED	**FINISH**	**CHARLESTON**
	Black*	54FDS
	Boulder*	54MIS
	Harbor*	54MKS
	Linen*	54MPS
	Mist*	54FHS
	Navy*	54FBS
	Oat*	**54FAS**
	Sage*	54FCS
	Stone*	54MYS
	Vanilla*	54FVS
PAINTED GLAZE	**FINISH**	**CHARLESTON**
	Biscotti Glaze**	54FVF
	Ember Glaze**	54MKO
	Pewter Glaze**	54MPQ

*Premium Finish

**Premium Glaze finish

New Haven

NEW! FINISHES

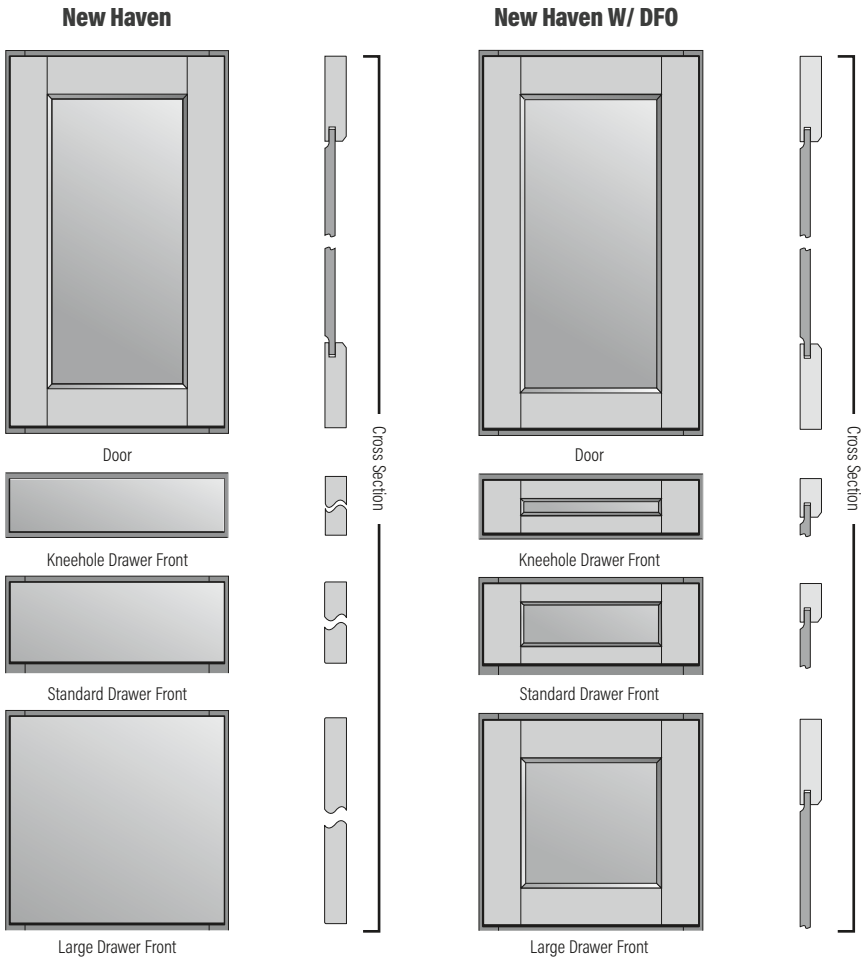

Door Style Details

Door Description:	Recessed Panel
Door Rail & Stile Width:	3"
New Haven Drawer Description:	Slab
New Haven W/ DFO Drawer Description:	5-Piece with Recessed Panel
Overlay	Full Overlay (FOL)
Tall Door Details:	Center Rail on 50" High Doors ■
Decorative Hardware:	Required
Specialty Doors	OFD (See page 53 for details)

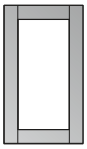

OFD

Available Finishes

CHERRY	FINISH	NEW HAVEN	NEW HAVEN W/ DFO
	Amber	40CFS	42CFS
	Clove	40CTS	42CTS
MAPLE	**FINISH**	**NEW HAVEN**	**NEW HAVEN W/ DFO**
	Almond	40GGS	42GGS
	Cider	**40MUS**	**42MUS**
	Latte	40GAS	42GAS
	Rye	40MTS	42MTS
	Slate	40GES	42GES
	Truffle	40MBS	42MBS
PAINTED	**FINISH**	**NEW HAVEN**	**NEW HAVEN W/ DFO**
	Black*	40FDS	42FDS
	Boulder*	40MIS	42MIS
	Harbor*	40MKS	42MKS
	Linen*	40MPS	42MPS
	Mist*	40FHS	42FHS
	Navy*	40FBS	42FBS
	Oat*	**40FAS**	**42FAS**
	Sage*	40FCS	42FCS
	Stone*	40MYS	42MYS
	Vanilla*	40FVS	42FVS

*Premium Finish

Sierra Vista

NEW! FINISHES

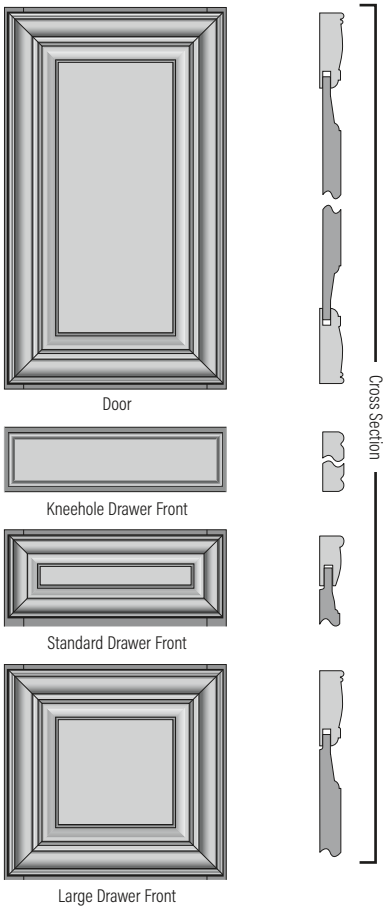

Door Style Details

Door Description:	Mitered with Raised Panel
Door Rail & Stile Width:	3"
Drawer Description:	Mitered 5-Piece with Raised Panel
Overlay	Full Overlay (FOL)
Tall Door Details:	Center Rail on 50" High Doors
Decorative Hardware:	Required
Specialty Doors	OFD, MFD (See page 53 for details)

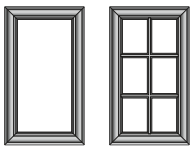

OFD MFD

Available Finishes

CHERRY	FINISH	SIERRA VISTA
	Amber	35CFS
	Clove	35CTS
MAPLE	**FINISH**	**SIERRA VISTA**
	Almond	35GGS
	Cider	**35MUS**
	Latte	35GAS
	Rye	35MTS
	Slate	35GES
	Truffle	35MBS
PAINTED	**FINISH**	**SIERRA VISTA**
	Black*	35FDS
	Boulder*	35MIS
	Harbor*	35MKS
	Linen*	35MPS
	Mist*	35FHS
	Navy*	35FBS
	Oat*	**35FAS**
	Sage*	35FCS
	Stone*	35MYS
	Vanilla*	35FVS
PAINTED GLAZE	**FINISH**	**SIERRA VISTA**
	Biscotti Glaze**	35FVF
	Ember Glaze**	35MKO
	Pewter Glaze**	35MPQ

*Premium Finish

**Premium Glaze Finish

Windsor

NEW! FINISHES

Windsor

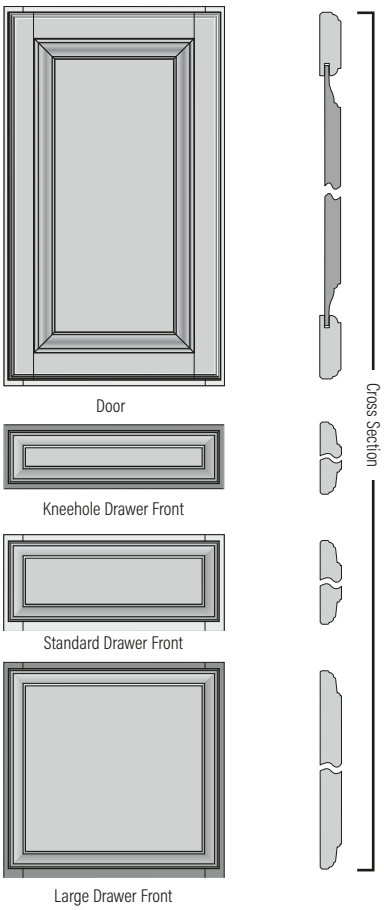

Windsor W/ DFO

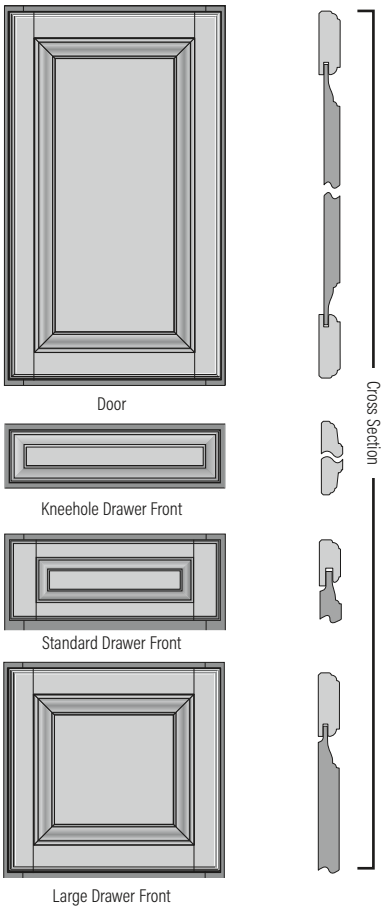

Door Style Details

Door Description:	Raised Panel
Door Rail & Stile Width:	2 ¼"
Windsor Drawer Description:	Detailed Slab
Windsor W/ DFO Drawer Description:	5-Piece with Raised Panel
Overlay	Full Overlay (FOL)
Tall Door Details:	Center Rail on 50" High Doors
Decorative Hardware:	Required
Specialty Doors:	OFD, MFD (See page 53 for details)

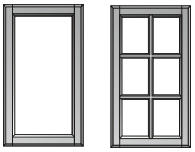

Available Finishes

CHERRY	FINISH	WINDSOR	WINDSOR W/ DFO
	Amber	44CFS	47CFS
	Clove	44CTS	47CTS
MAPLE	**FINISH**	**WINDSOR**	**WINDSOR W/ DFO**
	Almond	44GGS	47GGS
	Cider	**44MUS**	**47MUS**
	Latte	44GAS	47GAS
	Rye	44MTS	47MTS
	Slate	44GES	47GES
	Truffle	44MBS	47MBS
PAINTED	**FINISH**	**WINDSOR**	**WINDSOR W/ DFO**
	Black*	44FDS	47FDS
	Boulder*	44MIS	47MIS
	Harbor*	44MKS	47MKS
	Linen*	44MPS	47MPS
	Mist*	44FHS	47FHS
	Navy*	44FBS	47FBS
	Oat*	**44FAS**	**47FAS**
	Sage*	44FCS	47FCS
	Stone*	44MYS	47MYS
	Vanilla*	44FVS	47FVS
PAINTED GLAZE	**FINISH**	**WINDSOR**	**WINDSOR W/ DFO**
	Biscotti Glaze**	44FVF	47FVF
	Ember Glaze**	44MKO	47MKO
	Pewter Glaze**	44MPQ	47MPQ

*Premium Finish

**Premium Glaze Finish

Portfolio® Series Collections

Barnett

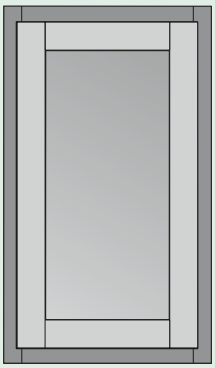

PAGE 12

Beckley



PAGE 13

Corban



PAGE 14

Downing

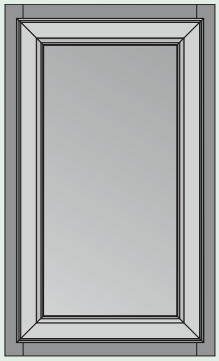

PAGE 15

Kinsdale



PAGE 16

Lausanne



PAGE 17

Maddox



PAGE 18

Madera



PAGE 19

Sonoma

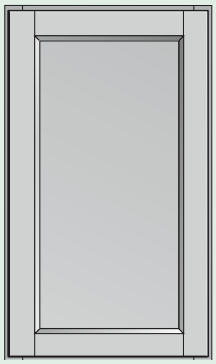

PAGE 20

Portfolio Series

CABINET FEATURES

Face Frames	Hardwood and/or engineered wood ¾" x 1⅝"
Side Panels	½" Engineered Wood
Tops, Bottoms, Floors	½" Engineered Wood
Back Panel	⅛" Hardboard Substrate Captured
Toe Kick	Inset ½" Engineered Wood (Unfinished)
Shelves	¾" Base and Wall Engineered Wood
Hinges	6-Way Adjustable Hidden Hinges
Limited Warranty	5 Year

DRAWER FEATURES

24" Deep Base **24" Deep Desk** **24" Deep Oven**	21" deep engineered wood drawer with MDF printed bottom and side-mounted drawer glides
21" Deep Vanity **21" Deep Desk**	18" deep engineered wood drawer with MDF printed bottom and side-mounted drawer glides
18" Deep Vanity	15" deep engineered wood drawer with MDF printed bottom and side-mounted drawer glides

CONSTRUCTION OPTIONS

- Accessible Height Option (AH)
- All Plywood Construction Option (APC)
  - » Must Upgrade to CushionClose Full-Extension Dovetail Drawer Option
- Cabinet Front Only Option (CFO)
- CushionClose Full-Extension Dovetail Drawer Option (CCDW)
- CushionClose Hinge Option (CCH)
- CushionClose Dovetail Sliding Shelves Option (CCSS)
- Full Depth Shelf Option (FDS)
- Furniture Ends Option (FE)
- Increased Depth Option (ID)
- Inverted Frame Option (IF)
- Matching Interior Option (MI)
- Plywood Ends Option (PE)
- Premium Finish Option
- Recessed Toe Kick Option (RTK)
- Reduced Depth Option (RD)
- Void Door Option (VDO)
- Void Top Drawer Option (VTD)
- **Void Toe Kick Option (VTK)**

SPECIALTY DOOR OPTIONS

- Mullion Frame Door Option (MFD)
- Open Frame Door Option (OFD)

SPECIES/FINISH AVAILABILITY BY COLLECTION

Finish:	Barnett	Beckley	Corban	Downing	Kinsdale	Lausanne	Maddox	Madera	Sonoma
Cherry Amber					■	■			■
Cherry Clove					■	■			■
Duraform Espresso	■			■					■
Duraform Harbor	■			■					■
Duraform Linen	■			■					■
Duraform Stone	■			■					■
Maple Almond	■	■	■		■	■	■	■	■
Maple Cider	■	■	■		■	■	■	■	■
Maple Latte	■	■	■		■	■	■	■	■
Maple Rye	■	■	■		■	■	■	■	■
Maple Slate	■	■	■		■	■	■	■	■
Maple Truffle	■	■	■		■	■	■	■	■
Painted Black*	■	■	■		■	■	■	■	■
Painted Boulder*	■	■	■		■	■	■	■	■
Painted Harbor*	■	■	■		■	■	■	■	■
Painted Linen*	■	■	■		■	■	■	■	■
Painted Mist*	■	■	■		■	■	■	■	■
Painted Navy*	■	■	■		■	■	■	■	■
Painted Oat*	■	■	■		■	■	■	■	■
Painted Sage*	■	■	■		■	■	■	■	■
Painted Stone*	■	■	■		■	■	■	■	■
Painted Vanilla*	■	■	■		■	■	■	■	■
Thermofoil White		■							
Painted Biscotti Glaze**		■	■		■		■		
Painted Ember Glaze**		■	■		■		■		
Painted Pewter Glaze**		■	■		■		■		

*Premium Finish

**Premium Glaze Finish

Barnett

NEW! FINISHES

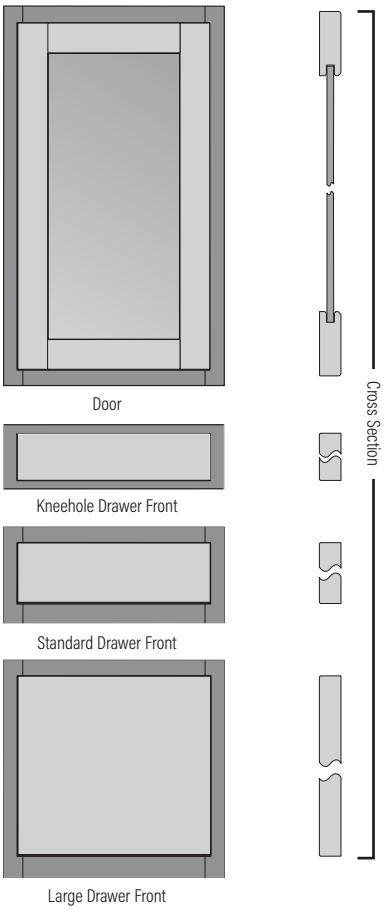

Door Style Details

Door Description:	Recessed Panel
Door Rail & Stile Width:	2 ¼"
Drawer Description:	Slab
Overlay	Partial Overlay (POL)
Tall Door Details:	No Center Rail on 50" High Doors
Decorative Hardware:	Recommended
Specialty Doors:	OFD (See page 53 for details)

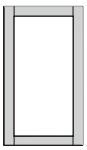

OFD

Available Finishes

MAPLE	FINISH	BARNETT
	Almond	19GGS
	Cider	**19MUS**
	Latte	19GAS
	Rye	19MTS
	Slate	19GES
	Truffle	19MBS
PAINTED	**FINISH**	**BARNETT**
	Black*	19FDS
	Boulder*	19MIS
	Harbor*	19MKS
	Linen*	19MPS
	Mist*	19FHS
	Navy*	19FBS
	Oat*	**19FAS**
	Sage*	19FCS
	Stone*	19MYS
	Vanilla*	19FVS
DURAFORM	**FINISH**	**BARNETT**
	Espresso	19EJS
	Harbor	19EKS
	Linen	19EPS
	Stone	19EYS

*Premium Finish

Beckley

NEW! FINISHES

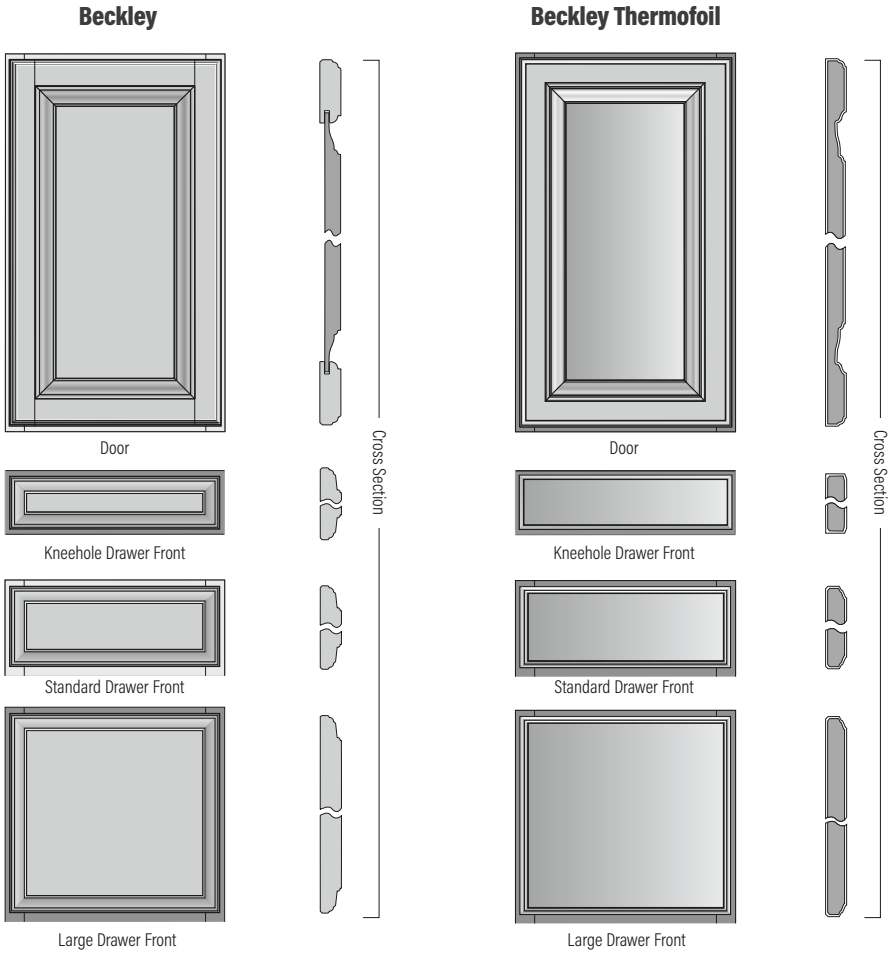

Door Style Details

Door Description:	Raised Panel
Door Rail & Stile Width:	2 ¼"
Beckley Drawer Description:	Slab
Overlay	Full Overlay (FOL)
Tall Door Details:	Center Rail on 50" High Doors ■
Decorative Hardware:	Required
Specialty Doors:	OFD, MFD (See page 53 for details)

■ Rails on 50" high doors

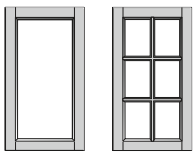

Available Finishes

MAPLE	FINISH	BECKLEY	BECKLEY THERMOFOIL
	Almond	69GGS	-
	Cider	69MUS	-
	Latte	69GAS	-
	Rye	69MTS	-
	Slate	69GES	-
	Truffle	69MBS	-
PAINTED	**FINISH**	**BECKLEY**	**BECKLEY THERMOFOIL**
	Black*	69FDS	-
	Boulder*	69MIS	-
	Harbor*	69MKS	-
	Linen*	69MPS	-
	Mist*	69FHS	-
	Navy*	69FBS	-
	Oat*	69FAS	-
	Sage*	69FCS	-
	Stone*	69MYS	-
	Vanilla*	69FVS	-
PAINTED GLAZE	**FINISH**	**BECKLEY**	**BECKLEY THERMOFOIL**
	Biscotti Glaze**	69FVF	-
	Ember Glaze**	69MKO	-
	Pewter Glaze**	69MPQ	-
THERMOFOIL	**FINISH**	**BECKLEY**	**BECKLEY THERMOFOIL**
	Themofoil White	-	I5W

*Premium Finish

**Premium Glaze Finish

Corban

NEW! FINISHES

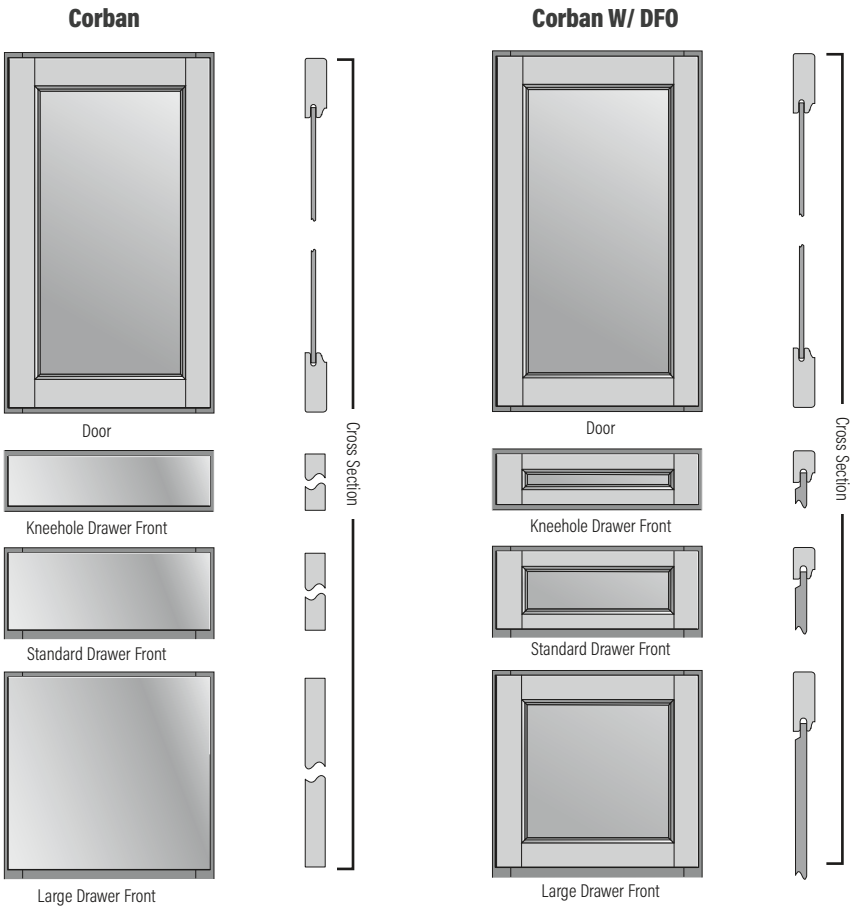

Door Style Details

Door Description:	Recessed Panel
Door Rail & Stile Width:	2¼"
Corban Drawer Description:	Slab
Corban W/ DFO Drawer Description:	5-Piece with Recessed Panel
Overlay	Full Overlay (FOL)
Tall Door Details:	Center Rail on 50" High Doors
Decorative Hardware:	Required
Specialty Doors:	OFD (See page 53 for details)

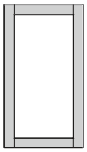

OFD

Available Finishes

MAPLE	FINISH	CORBAN	CORBAN W/ DFO
	Almond	74GGS	75GGS
	Cider	**74MUS**	**75MUS**
	Latte	74GAS	75GAS
	Rye	74MTS	75MTS
	Slate	74GES	75GES
	Truffle	74MBS	75MBS
PAINTED	**FINISH**	**CORBAN**	**CORBAN W/ DFO**
	Black*	74FDS	75FDS
	Boulder*	74MIS	75MIS
	Harbor*	74MKS	75MKS
	Linen*	74MPS	75MPS
	Mist*	74FHS	75FHS
	Navy*	74FBS	75FBS
	Oat*	**74FAS**	**75FAS**
	Sage*	74FCS	75FCS
	Stone*	74MYS	75MYS
	Vanilla*	74FVS	75FVS
PAINTED GLAZE	**FINISH**	**CORBAN**	**CORBAN W/ DFO**
	Biscotti Glaze**	74FVF	75FVF
	Ember Glaze**	74MKO	75MKO
	Pewter Glaze**	74MPQ	75MPQ

*Premium Finish

**Premium Glaze Finish

Downing

Downing

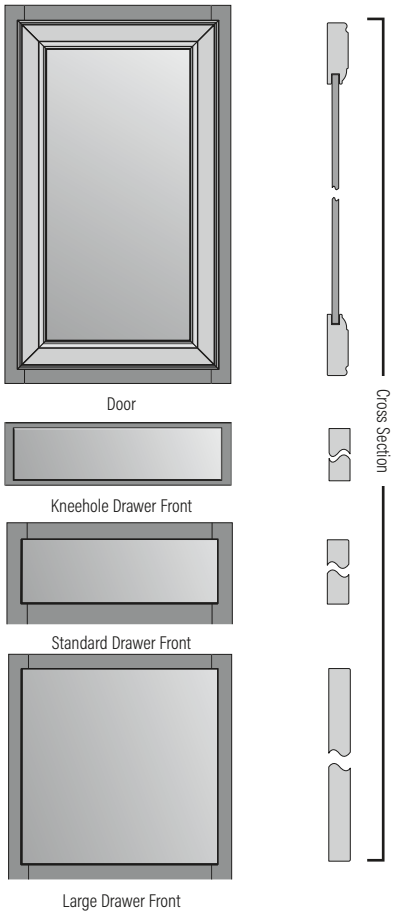

Door Style Details

Door Description:	Mitered with Recessed Panel
Door Rail & Stile Width:	2¼"
Downing Drawer Description:	Slab
Overlay	Partial Overlay (POL)
Tall Door Details:	No Center Rail on 50" High Doors
Decorative Hardware:	Recommendeded
Specialty Doors:	OFD (See page 53 for details)

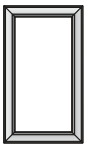

OFD

Available Finishes

DURAFORM	FINISH	DOWNING
	Espresso	18EJS
	Harbor	18EKS
	Linen	18EPS
	Stone	18EYS

Kinsdale

NEW! FINISHES

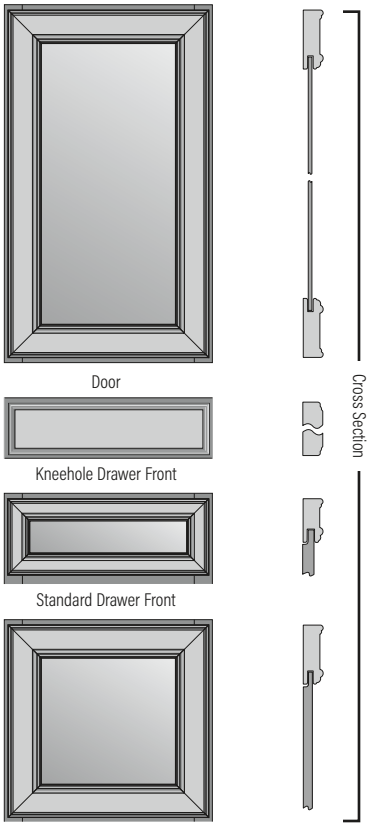

Door Style Details

Door Description:	Mitered with Recessed Panel
Door Rail & Stile Width:	2¼"
Kinsdale Drawer Description:	Mitered 5-Piece with Recessed Panel
Overlay	Full Overlay (FOL)
Tall Door Details:	No Center Rail on 50" High Doors
Decorative Hardware:	Required
Specialty Doors:	OFD, MFD (See page 53 for details)

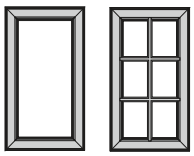

OFD MFD

Available Finishes

CHERRY	FINISH	KINSDALE
	Amber	30CFS
	Clove	30CTS
MAPLE	**FINISH**	**KINSDALE**
	Almond	30GGS
	Cider	**30MUS**
	Latte	30GAS
	Rye	30MTS
	Slate	30GES
	Truffle	30MBS
PAINTED	**FINISH**	**KINSDALE**
	Black*	30FDS
	Boulder*	30MIS
	Harbor*	30MKS
	Linen*	30MPS
	Mist*	30FHS
	Navy*	30FBS
	Oat*	**30FAS**
	Sage*	30FCS
	Stone*	30MYS
	Vanilla*	30FVS
PAINTED GLAZE	**FINISH**	**KINSDALE**
	Biscotti Glaze**	30FVF
	Ember Glaze**	30MKO
	Pewter Glaze**	30MPQ

*Premium Finish

**Premium Glaze Finish

Lausanne

NEW! FINISHES

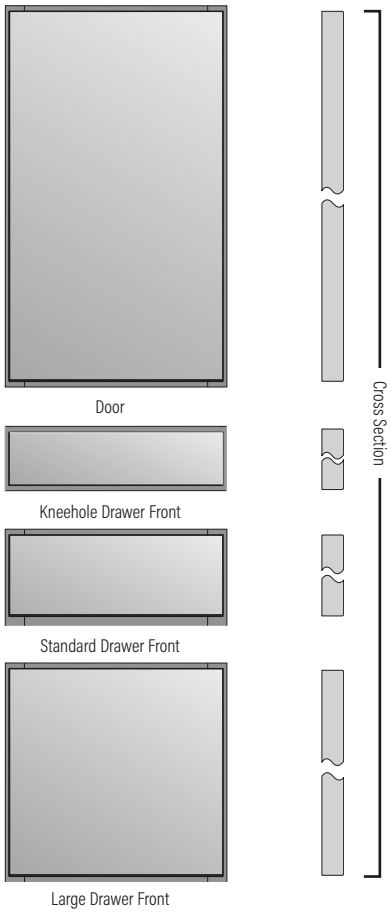

Door Style Details

Door Description:	Slab ■
Door Rail & Stile Width:	3" (on OFD doors)
Drawer Description:	Slab ■
Overlay	Full Overlay (FOL)
Tall Door Details:	No Center Rail on 50" High Doors
Decorative Hardware:	Required
Specialty Doors:	OFD (See page 53 for details)

■ Stained finishes feature edge-banding on all sides

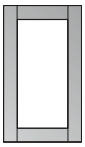

OFD

Available Finishes

CHERRY	FINISH	LAUSANNE
	Amber	39CFS
	Clove	39CTS
MAPLE	**FINISH**	**LAUSANNE**
	Almond	39GGS
	Cider	**39MUS**
	Latte	39GAS
	Rye	39MTS
	Slate	39GES
	Truffle	39MBS
PAINTED	**FINISH**	**LAUSANNE**
	Black*	39FDS
	Boulder*	39MIS
	Harbor*	39MKS
	Linen*	39MPS
	Mist*	39FHS
	Navy*	39FBS
	Oat*	**39FAS**
	Sage*	39FCS
	Stone*	39MYS
	Vanilla*	39FVS

*Premium Finish

Maddox

NEW! FINISHES

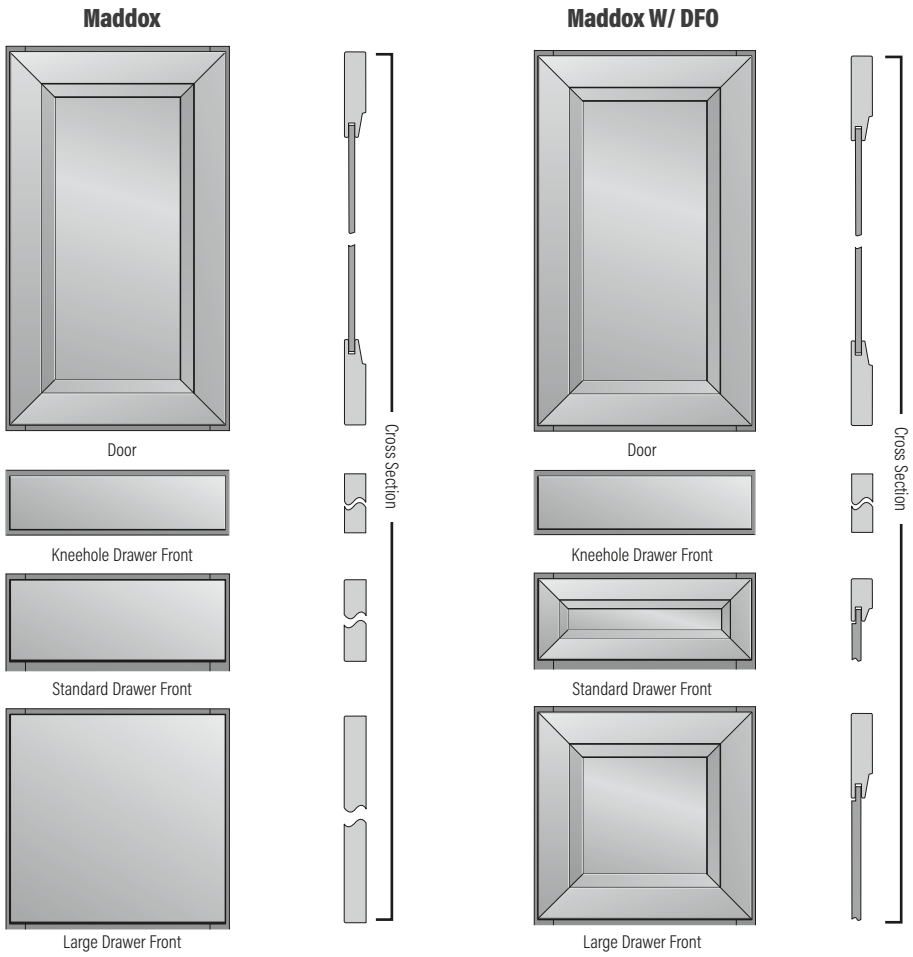

Door Style Details

Door Description:	Mitered with Recessed Panel
Door Rail & Stile Width:	3"
Maddox Drawer Description:	Slab
Maddox W/ DFO Drawer Description:	Mitered 5-Piece with Recessed Panel
Overlay	Full Overlay (FOL)
Tall Door Details:	No Center Rail on 50" High Doors
Decorative Hardware:	Required
Specialty Doors:	OFD (See page 53 for details)

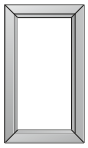

OFD

Available Finishes

MAPLE	FINISH	MADDOX	MADDOX W/ DFO
	Almond	57GGS	58GGS
	Cider	**57MUS**	**58MUS**
	Latte	57GAS	58GAS
	Rye	57MTS	58MTS
	Slate	57GES	58GES
	Truffle	57MBS	58MBS
PAINTED	**FINISH**	**MADDOX**	**MADDOX W/ DFO**
	Black*	57FDS	58FDS
	Boulder*	57MIS	58MIS
	Harbor*	57MKS	58MKS
	Linen*	57MPS	58MPS
	Mist*	57FHS	58FHS
	Navy*	57FBS	58FBS
	Oat*	**57FAS**	**58FAS**
	Sage*	57FCS	58FCS
	Stone*	57MYS	58MYS
	Vanilla*	57FVS	58FVS
PAINTED GLAZE	**FINISH**	**MADDOX**	**MADDOX W/ DFO**
	Biscotti Glaze**	57FVF	58FVF
	Ember Glaze**	57MKO	58MKO
	Pewter Glaze**	57MPQ	58MPQ

*Premium Finish

**Premium Glaze Finish

Madera

NEW! DOOR STYLE

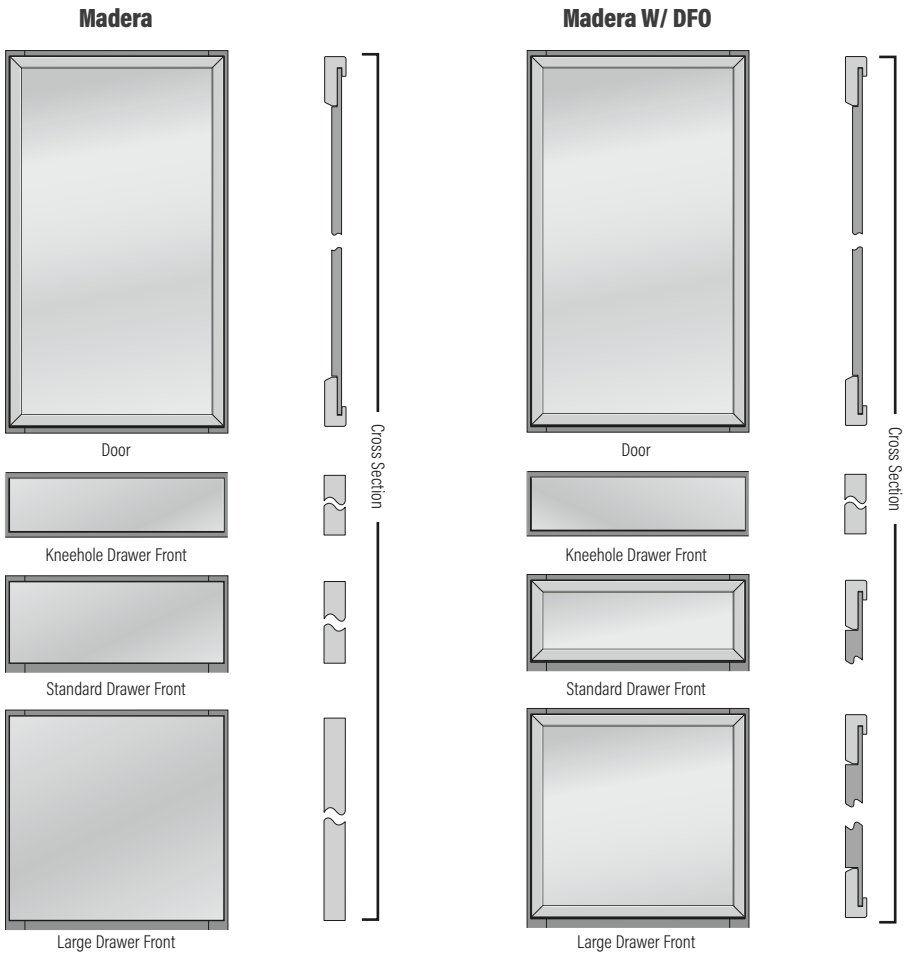

Door Style Details

Door Description:	Mitered with Recessed Panel
Door Rail & Stile Width:	¾" (2 ¼" on OFD)
Madera Drawer Description:	Slab
Madera DFO Drawer Description:	Mitered 5-Piece with Recessed Panel
Overlay	Full Overlay (FOL)
Tall Door Details:	No Center Rail on 50" High Doors
Decorative Hardware:	Required ■
Specialty Doors:	OFD (See page 63 for details)

■ Cannot drill more than 1½" from all edges of door

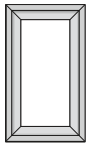

OFD

Available Finishes

MAPLE	FINISH	MADERA	MADERA W/ DFO
	Almond	78GGS	79GGS
	Cider	78MUS	79MUS
	Latte	78GAS	79GAS
	Rye	78MTS	79MTS
	Slate	78GES	79GES
	Truffle	78MBS	79MBS
PAINTED*	**FINISH**	**MADERA**	**MADERA W/ DFO**
	Black*	78FDS	79FDS
	Boulder*	78MIS	79MIS
	Harbor*	78MKS	79MKS
	Linen*	78MPS	79MPS
	Mist*	78FHS	79FHS
	Navy*	78FBS	79FBS
	Oat*	78FAS	79FAS
	Sage*	78FCS	79FCS
	Stone*	78MYS	79MYS
	Vanilla*	78FVS	79FVS

*Premium Finish

Sonoma

NEW! FINISHES

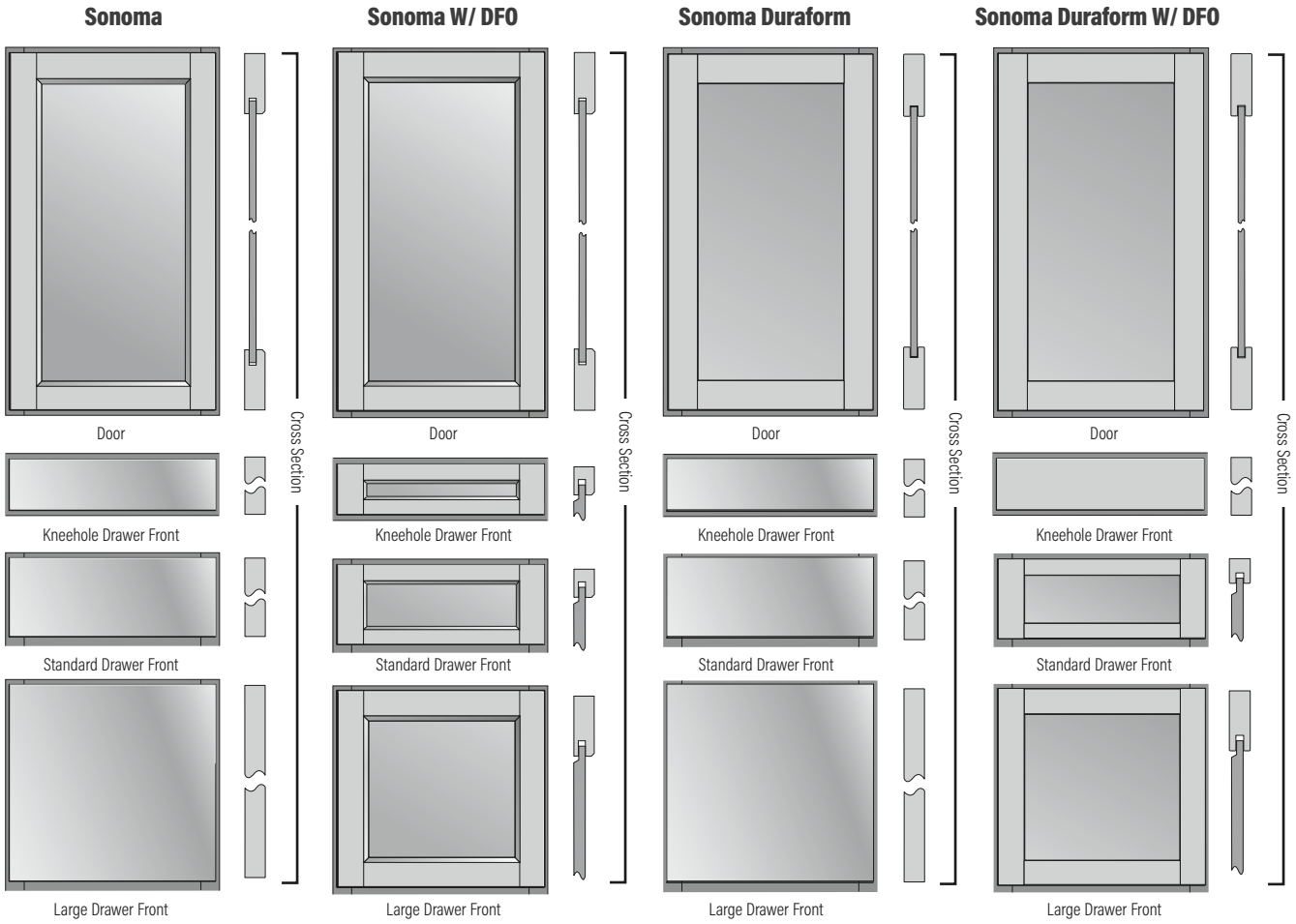

Door Style Details

Door Description:	Recessed Panel
Door Rail & Stile Width:	2 ¼"
Sonoma Drawer Description:	Slab
Sonoma W/ DFO Drawer Description:	5-Piece with Recessed Panel
Overlay	Full Overlay (FOL)
Tall Door Details:	Center Rail on 50" High Doors ■
Decorative Hardware:	Required
Duraform Material:	Polypropylene
Specialty Doors:	OFD (See page 53 for details)

■ Duraform door styles do not have center rails on 50" high doors

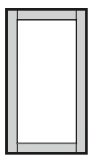

OFD

Available Finishes

CHERRY	FINISH	SONOMA	SONOMA W/ DFO	SONOMA DURAFORM	SONOMA DURAFORM W/ DFO
	Amber	28CFS	29CFS	-	-
	Clove	28CTS	29CTS	-	-
MAPLE	**FINISH**	**SONOMA**	**SONOMA W/ DFO**	**SONOMA DURAFORM**	**SONOMA DURAFORM W/ DFO**
	Almond	28GGS	29GGS	-	-
	Cider	28MUS	29MUS	-	-
	Latte	28GAS	29GAS	-	-
	Rye	28MTS	29MTS	-	-
	Slate	28GES	29GES	-	-
	Truffle	28MBS	29MBS	-	-
PAINTED	**FINISH**	**SONOMA**	**SONOMA W/ DFO**	**SONOMA DURAFORM**	**SONOMA DURAFORM W/ DFO**
	Black*	28FDS	29FDS	-	-
	Boulder*	28MIS	29MIS	-	-
	Harbor*	28MKS	29MKS	-	-
	Linen*	28MPS	29MPS	-	-
	Mist*	28FHS	29FHS	-	-
	Navy*	28FBS	29FBS	-	-
	Oat*	28FAS	29FAS	-	-
	Sage*	28FCS	29FCS	-	-
	Stone*	28MYS	29MYS	-	-
	Vanilla*	28FVS	29FVS	-	-
DURAFORM	**FINISH**	**SONOMA**	**SONOMA W/ DFO**	**SONOMA DURAFORM**	**SONOMA DURAFORM W/ DFO**
	Espresso	-	-	28EJS	29EJS
	Harbor	-	-	28EKS	29EKS
	Linen	-	-	28EPS	29EPS
	Stone	-	-	28EYS	29EYS

*Premium Finish

Value Built® Series Collections

Canton

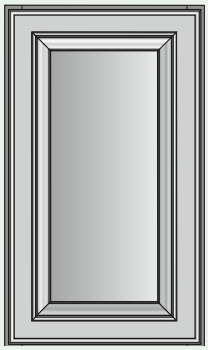

PAGE 22

Fairfield

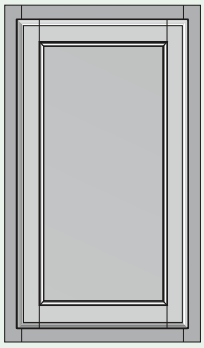

PAGE 23

CABINET FEATURES	
Face Frames	Hardwood and/or engineered wood ¾" x 1⅝"
Side Panels	½" Engineered Wood
Tops, Bottoms, Floors	½" Engineered Wood
Back Panel	⅛" Hardboard Substrate Captured
Toe Kick	Inset ½" Engineered Wood (unfinished)
Shelves	Base and Wall cabinets feature ½" engineered wood; Specialty Door Wall cabinets feature ¾" engineered wood
Hinges	6-Way Adjustable Hidden Hinges
Limited Warranty	2 Year

DRAWER FEATURES	
24" Deep Base **24" Deep Desk** **24" Deep Oven**	18" deep engineered wood drawer with MDF printed bottom and side-mounted drawer glides
21" Deep Vanity **21" Deep Desk**	18" deep engineered wood drawer with MDF printed bottom and side-mounted drawer glides
18" Deep Vanity	15" deep engineered wood drawer with MDF printed bottom and side-mounted drawer glides

CONSTRUCTION OPTIONS

- Cabinet Front Only Option (CFO)
- Full Depth Shelf Option (FDS)
- Increased Depth Option (ID)
- Inverted Frame Option (IF)
- Matching Interior Option (MI)
- Reduced Depth Option (RD)
- Recessed Toe Kick Option (RTK)
- Void Door Option (VDO)
- Void Top Drawer Option (VTD)
- **Void Toe Kick Option (VTK)**

SPECIALTY DOOR OPTIONS

- Mullion Frame Door Option (MFD)
- Open Frame Door Option (OFD)

FINISH AVAILABILITY

Finish:	Canton	Fairfield
Rye		■
Truffle		■
White	■	

Canton

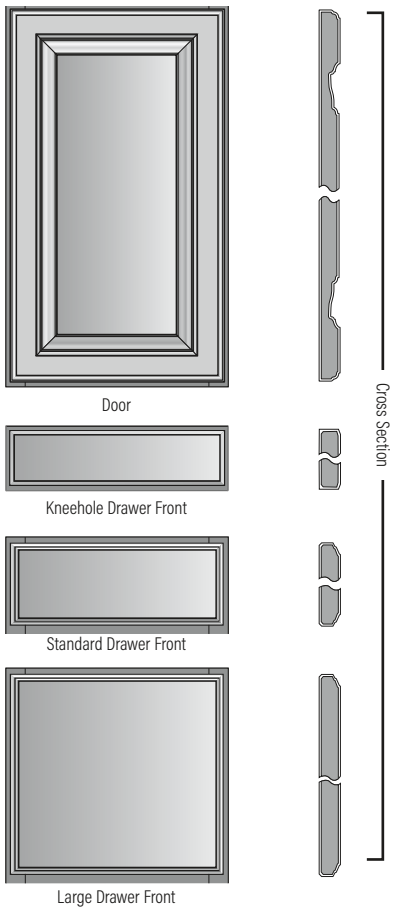

Door Style Details

Door Description:	Raised Panel
Door Rail & Stile Width:	2 ¼"
Drawer Description:	Routed Slab
Overlay	Full Overlay
Tall Door Details:	No Center Rail on 50" High Door
Decorative Hardware:	Required
Specialty Doors:	OFD, MFD (See page 53 for details)

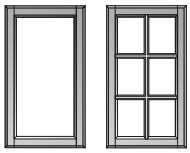

OFD MFD

Available Finishes

THERMOFOIL	FINISH	CANTON
	White	I3W

Fairfield

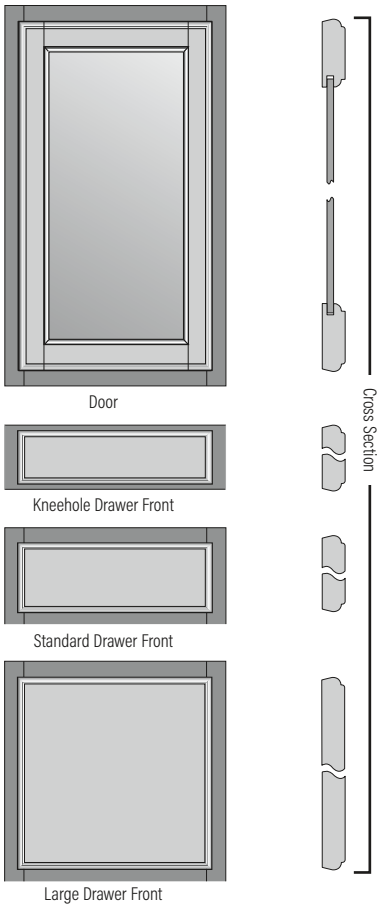

Door Style Details

Door Description:	Recessed
Door Rail & Stile Width:	1⅞"
Drawer Description:	Routed Slab
Overlay	Standard Overlay
Tall Door Details:	Center Rail on 50" High Door
Decorative Hardware:	Recommended
Specialty Doors:	OFD, MFD (See page 53 for details)

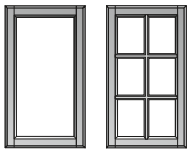

OFD MFD

Available Finishes

HARDWOOD	FINISH	FAIRFIELD
	Rye	P5T
	Truffle	P5B

STANDARD CABINET SPECIFICATIONS

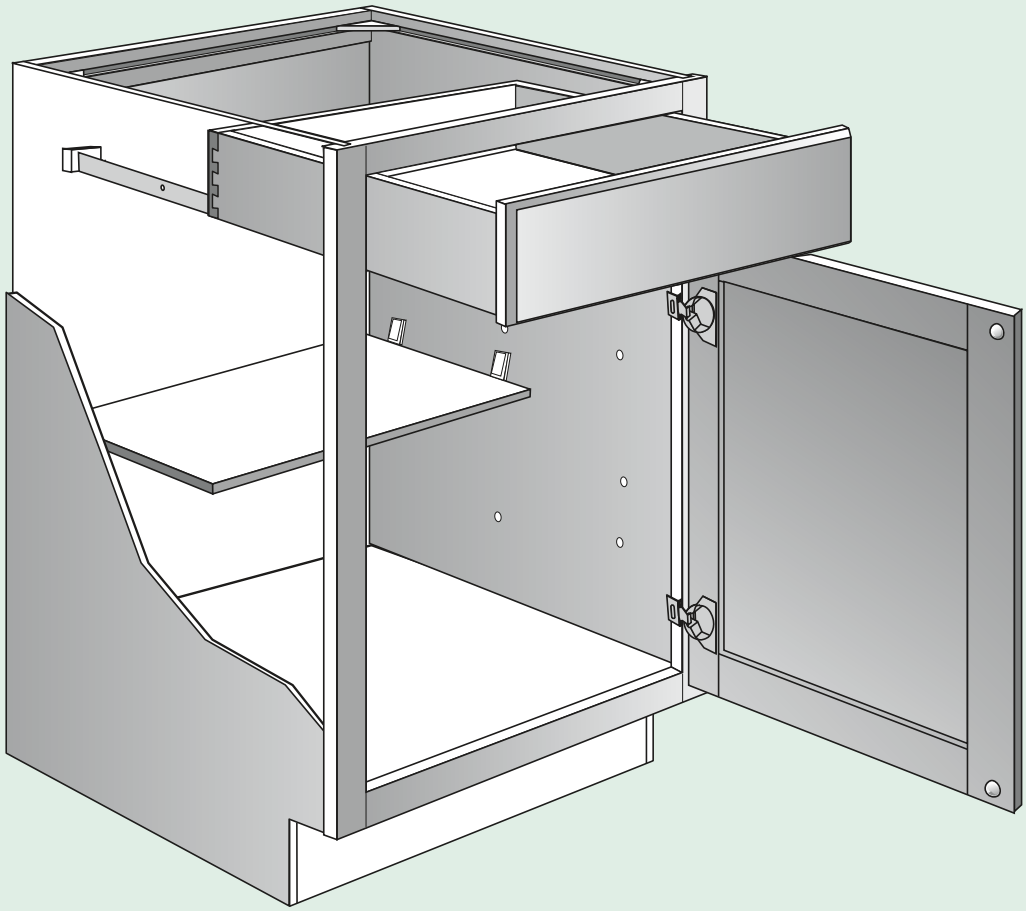

KCMA Certified

All cabinetry manufactured by Timberlake is certified by the Kitchen Cabinet Manufacturers Association (KCMA).

KCMA sets the American National Standards Institute/ KCMA 161.1- 2000 uniform performance and construction standards for kitchen and vanity cabinets. The program is referenced by U.S. government agencies, architects, builders, remodelers, and other specifiers.

Cabinets that bear the KCMA seal of certification are recognized as a quality product with the ability to perform after a rigorous battery of tests, simulating years of typical household use. Tests are performed by approved third-party independent laboratories.

Timberlake is proud to display the KCMA seal of certification for cabinet construction.



Environmentally Responsible Stewardship

As a leading U.S. manufacturer of fine cabinetry, Timberlake, a division of American Woodmark Corporation, is committed to conducting business in a manner that both protects the environment and safeguards public health and safety. To achieve this end, the company proactively identifies potential environmental risks and monitors compliance with appropriate federal, state, local, and internal standards.

Timberlake has received certification by the Kitchen Cabinet Manufacturers Association (KCMA) Environmental Stewardship Program on all products. The certification was awarded based on compliance across a broad range of activity including air quality, product resource management, process resource management, environmental stewardship, and community relations.

Timberlake works with all suppliers to encourage sustainable forestry practices. Particle board and plywood are purchased from suppliers that meet the Composite Panel Association requirements for Environmentally Preferable Products including formaldehyde emissions that comply with ANSI standards.

Timberlake uses leading edge technologies to limit both hazardous and non-hazardous emissions, byproducts, and waste. Ongoing, formal programs identify opportunities for recycling and reusing materials. When waste ultimately requires disposal, steps are taken to minimize the environmental impact.

The American Woodmark Foundation supports local programs serving the community, including activities focused on maintaining the quality of life.

Timberlake is dedicated to doing our part in the preservation and sustainability of the environment.



Continuous Improvement

In keeping with our policy of continuous product refinement, Timberlake reserves the right to change specifications in design and materials as conditions require.

Standard Cabinet Specifications

Cabinet Front Face Frames

Cabinet front face frames are made from ¾" x 1⅝" kiln-dried solid wood and/or engineered materials to prevent warping and provide superior strength, durability and finished appearance. Face frame joints are precision fixtured, pressure fitted and mechanically fastened.

Cabinet Side Panels

Cabinet side panels are ½" thick engineered wood. The exterior sides match cabinet finish and interior sides are finished with a natural woodgrain look. They are captured into a grooved front face frame and secured using high-strength fasteners and glue.

Cabinet Tops, Bottoms, and Floors

Tops, bottoms, and floors are ½" thick engineered wood. The exterior and interiors are finished with a natural woodgrain look. They are fitted and glued into the cabinet front face frame grooves, then captured in the grooves of the cabinet side panels.

Cabinet Back

The cabinet back is made from ⅛" thick hardboard substrate. The inside cabinet surface is finished with a natural woodgrain look.

Hanging Rails

The base and vanity top hanging rail is ¾" thick solid wood, glued to the cabinet side panels. The wall cabinet hanging rails are ½" thick engineered wood, glued and mechanically fastened into the cabinet back, cabinet side panels and top/bottom.

Wall Cabinet Shelves

Portfolio Select and Portfolio Series

Wall cabinet shelves are ¾" thick engineered wood. The shelves are finished with a natural woodgrain look. Shelves are banded on one side with edge banding. All shelves are adjustable and meet KCMA load standards of 15 pounds per square foot.

Value Built Series

Wall cabinet shelves are ½" thick engineered wood. The shelves are finished with a natural woodgrain look. Shelves are banded on one side with edge banding. All shelves are adjustable and meet KCMA load standards of 15 pounds per square foot.

Corner Blocks

Corner blocks are attached to help ensure cabinet squareness and allow for proper countertop installation.

Base and Desk Cabinet Shelves

Portfolio Select and Portfolio Series

Base cabinet shelves are ¾" thick, half-depth engineered wood. The shelves are finished with a natural woodgrain look. Desk cabinets feature ¾" full-depth shelves. Shelves are banded on one side with edge banding. All shelves are adjustable and meet KCMA load standards of 15 pounds per square foot.

Value Built Series

Base cabinet shelves are ½" thick engineered wood. The shelves are finished with a natural woodgrain look. Desk cabinets feature ½" full-depth shelves. Shelves are banded on one side with edge banding. All shelves are adjustable and meet KCMA load standards of 15 pounds per square foot.

Drawer Systems

Portfolio Select Series 24" Deep

Portfolio Select Series now features CushionClose glides standard. Portfolio Select Series 24" deep base and desk cabinetry utilize natural finish ⅝" thick dovetail hardwood drawers and full-extension CushionClose hidden glides. All drawers meet KCMA load standards of 15 pounds per square foot.

Portfolio and Value Built Series 24" Deep

Portfolio and Value Built Series 24" deep base and desk cabinetry utilize engineered wood drawers with printed MDF bottoms and side-mounted drawer glides. All drawers meet KCMA load standards of 15 pounds per square foot. CushionClose Full-Extension Dovetail Drawer Option is available for Portfolio Series only.

Sliding Shelves

Sliding shelves feature engineered wood with printed MDF bottoms and side-mounted drawer glides. All drawers meet KCMA load standards of 15 pounds per square foot. CushionClose Full-Extension Dovetail Sliding Shelf Options are available for Portfolio Select and Portfolio Series only.

Hinges

Portfolio Select Series

Porfolio Select Series now features CushionClose hinges standard. Portfolio Select Series utilize fully concealed, CushionClose hidden hinges.

Portfolio and Value Built Series

Portfolio and Value Built Series utilize fully concealed, self-closing hidden hinges. CushionClose Hinge Option is available for Portfolio Series only.

Inset Toe Kick

Inset toe kicks are constructed of ½" thick unfinished engineered wood. Standard toe kick dimensions are 4" high and recessed 3½".

BTK8 PRT (matching toe kick) required for installation.

Finishing Systems and Cabinet Care

Finishing Systems

The finishing systems used on our products are designed to ensure the beauty and durability of our cabinetry. State-of-the-art equipment allows precise sanding, filling, and finish coverage of each of our products. Our products are extremely resistant to stains and surface damage that can be caused by common household chemicals. Our products exceed KCMA and ANSI standards for resistance to stains like coffee, grape juice, and moisture.

Cabinet Care

Remove dust from cabinets frequently with a soft lint-free cloth. The cloth may be slightly dampened with water. Do not use a paste wax type material. Wax build-up is difficult to remove and will leave a residue that attracts dust and moisture. Polishes containing silicon should not be used. Clean spills immediately. Use a clean cloth and mild soap if necessary. Wipe dry with a clean soft cloth. Do not use detergents, citrus cleaners or ammonia-based cleaners, chlorine-based cleaners, steel wool, soap pads, or abrasive cleaners on cabinets.

Extra care should be taken that cabinet finishes are not exposed to heat in excess of 200° Fahrenheit (174° for thermofoil laminated door styles). Do not place or mount small appliances beneath wall cabinets. These appliances (such as coffee makers and toasters) can produce excessive heat and moisture which can damage the finish of cabinets. Do not expose doors or drawer fronts (especially thermofoil) to heat created from self-cleaning ovens or ranges. A heat shield kit should be used when thermofoil cabinets are installed or mounted directly next to an oven or range.
For more cabinet care information, please visit www.timberlake.com/care.

Allow Cabinets To Age Beautifully

Our cabinets showcase the careful selection of natural and engineered materials to achieve the best possible look. While every effort is made to match wood grain as closely as possible, no two pieces of wood are exactly alike, even from the same tree. These differences in natural color and grain mean that each piece will respond differently to the finishing materials used. For example, close-grained woods absorb less and will vary in color from more open-grained pieces from the very same tree. It's these variations that contribute to the beauty and distinction of quality wood products. However, exposure to sunlight, smoke, and chemicals may cause some materials to fade, darken or vary from their original color over time.

Cabinets, doors, drawer fronts, and accessories added at a later date may not exactly match cabinets installed now. For the same reasons, door samples or displays may not represent the exact color of cabinets received at the time of shipment. Consumers should also read all cleaning agent instructions carefully before application.

Due to changes that occur from natural and environmental factors a cabinet is exposed to over its lifetime, we cannot be responsible for variations that occur in the finish of natural and engineered materials as they age.

Door Species & Characteristics

Timberlake Cabinetry incorporates solid hardwoods and hardwood veneers. These are natural materials with inherent variations. As such, our quality standards establish tolerance ranges for matching the hardwood pieces. Consumers should review actual samples in our selection centers and cabinet displays to help them establish realistic expectations of variations involving wood grain, color tones, presence of knots, and so forth.

These variations are at the heart of the unique natural beauty of finished hardwood. In addition, exposure of wood products to sunlight, some chemical agents, and smoke can cause wood colors to change over time.

Cherry

Cherry is a close-grained, multicolored hardwood with occasional pin knots and fine grain variations appearing as curls and waves. Natural characteristics of Cherry include:

- Small sap pockets, pin knots, and streaks
- Color ranges from pale yellow sapwood to deep reddish brown heartwood, with occasional shades of white, green, pink, or even grey
- Staining reveals subtle variations and colors that typically darken over time
- Variations within a single door

Duraform

Duraform uses highly-technological manufacturing processes to bond foils, vinyl films, and coatings to medium density fiberboard (MDF), high density fiberboard (HDF), and similar materials to achieve a product with exceptional stability, consistency and durability.

- The finish, color, and texture are consistent throughout the surface
- The surface is highly durable and easy to clean
- Materials are resistant to humidity and fading
- Refer to page 27 for standard cabinet box construction

Hardwoods

Hardwoods have a dense structure and come from broad leaved deciduous trees such as maple, oak, birch, cherry, hickory, poplar, or ash species. We use a combination of these to achieve a great looking and highly durable product. Natural features include:

- Light blonde to dark reddish brown tones
- Small black and reddish brown mineral streaks or deposits that darken with stain
- Wavy, curly bird's-eye, or burl graining as well as worm tracking across the grain that will darken when stained
- Variations within a single door

Maple

Maple is an exceptionally hard, finely grained wood species with a fine, even texture. Darker stains will moderate the color variance, lighter stains mellow with golden hues over time. Natural characteristics of Maple include:

- Light blonde tones to dark reddish brown tones
- Small mineral streaks of light blonde or reddish brown that darken with stain
- Wavy, curly bird's-eye, or burl graining as well as worm tracking across the grain that will darken when stained
- Variations within a single door

Painted

Painted finishes combine hardwoods and engineered materials including solid wood, medium density fiberboard (MDF), high density fiberboard (HDF), and similar materials to achieve a product with superior stability, consistency, coverage, and durability. Painted door features include:

- Visible joint lines may appear due to the natural expansion and contraction of wood
- A natural aging process that may change the tone of paint colors over time

Thermofoil

Thermofoil is thick vinyl film bonded to warp-resistant engineered wood which allow cabinet doors and drawer fronts to exhibit the same styling and detail found in solid wood doors.

- The color is consistent throughout the film
- The core is medium density fiberboard (MDF) with a melamine back
- The surface is durable, easy to clean, and especially resistant to chipping and cracking

Wall Cabinet Construction

The drawing below illustrates and identifies the parts of a standard wall cabinet.

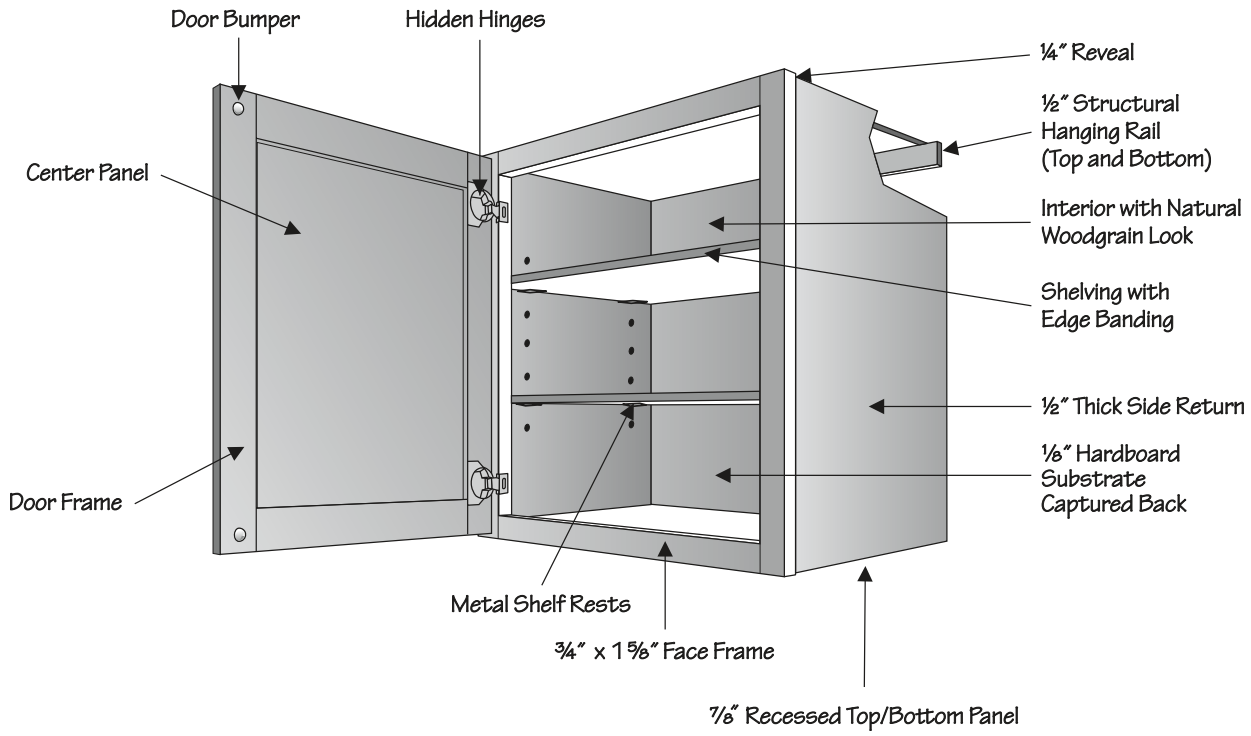

NOTE: Single door wall cabinets must be ordered hinged left or right and can be reversed in the field.

Base Cabinet Construction

The drawing below illustrates and identifies the parts of a standard base cabinet.

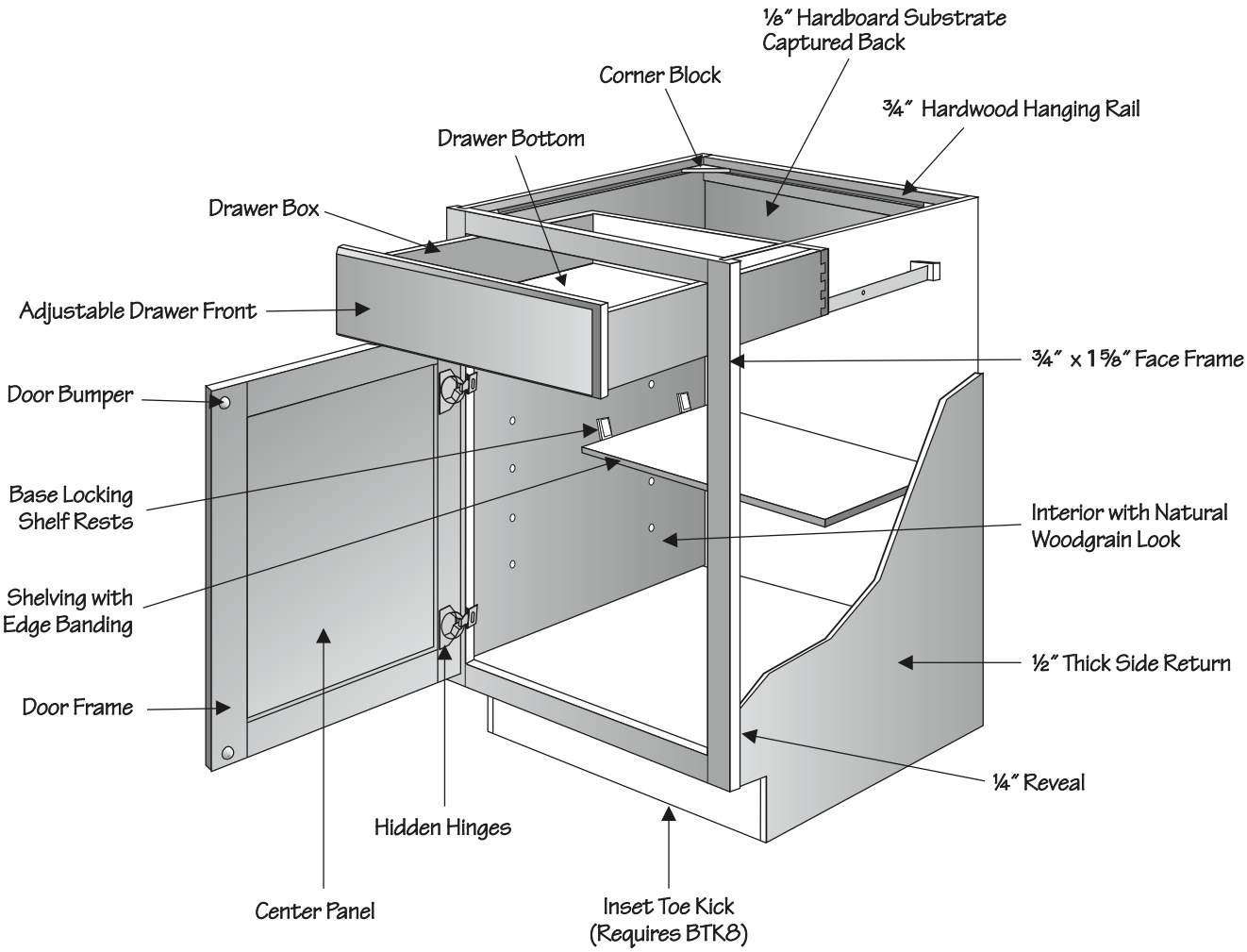

NOTE: Single door base cabinets are hinged left and can be reversed in the field.

Cabinet Dimensions

These illustrations specify dimensions of vertical stiles and horizontal rails, inset toe kick, cabinet heights, and standard interior opening heights. Wall Top Hinge and all Butt door cabinets do not have a center stile. Wall cabinets 39" or wider will feature a 3 ¼" center stile.

Wall Cabinets

Wall Cabinet 42" High

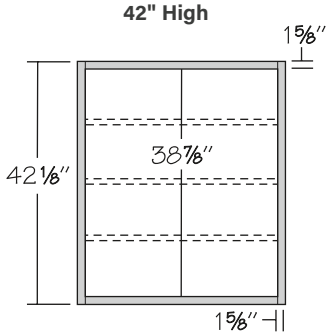

Wall Cabinet 39" High

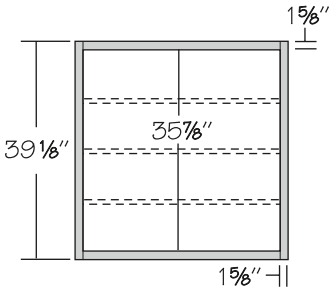

Wall Cabinet 36" High

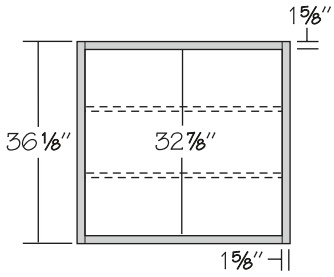

Wall Cabinet 30" High

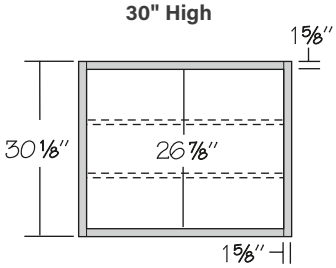

Wall Cabinet 27" High

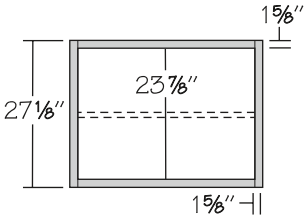

Wall Cabinet 24" High

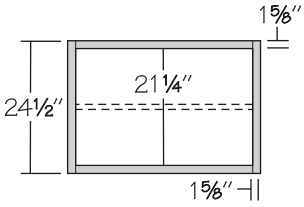

Wall Cabinet 21" High

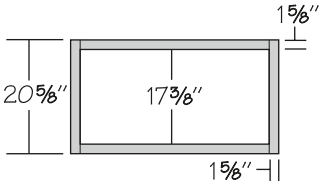

Wall Cabinet 18" High

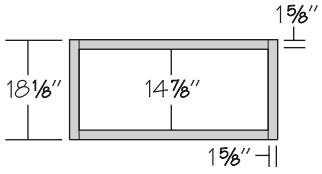

Wall Cabinet 15" High

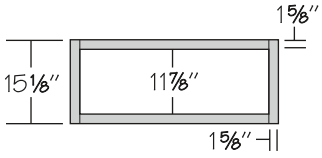

Wall Cabinet 12" High

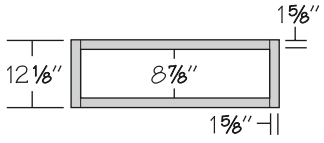

Base Cabinets

Inset Toe Kick

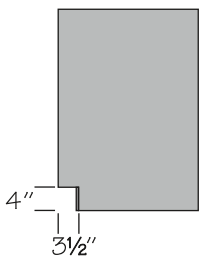

Standard Base Cabinet with Butt Doors

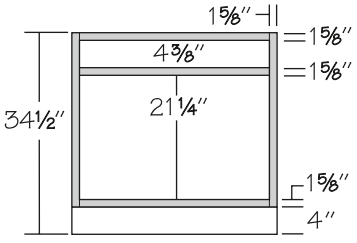

Standard Base Cabinet with Center Stile

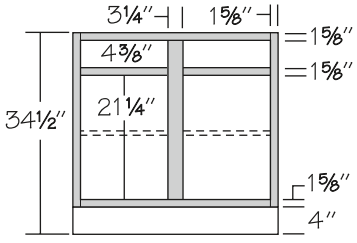

Full-Height Base Cabinet

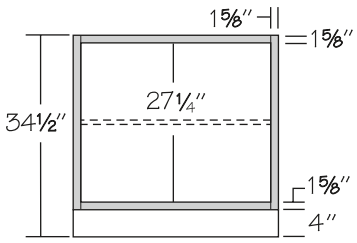

Drawer Base Cabinets

2-Drawer Base Cabinet

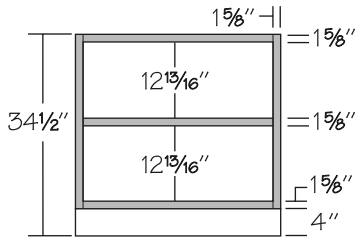

3-Drawer Base Cabinet

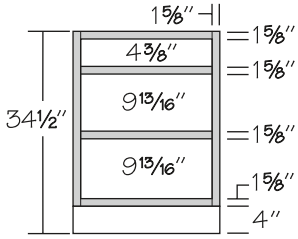

4-Drawer Base Cabinet

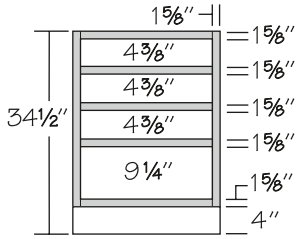

Pedestal Drawer Cabinet

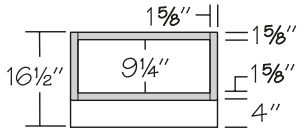

12" High Furniture Drawer Cabinet

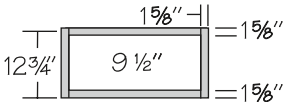

6" High Furniture Drawer Cabinet

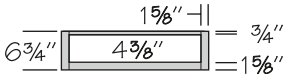

Vanity Cabinets

Vanity Base Cabinet Standard Height

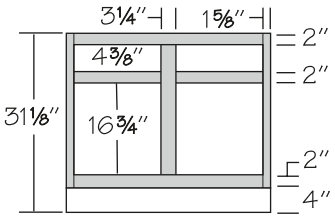

Vanity Drawer Base Standard Height

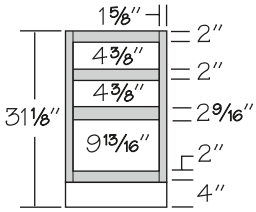

Vanity Base Cabinet Base Height

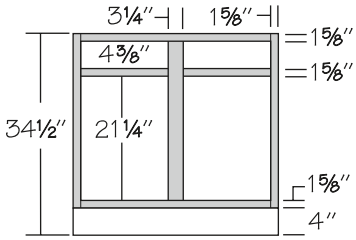

Vanity Drawer Base Base Height

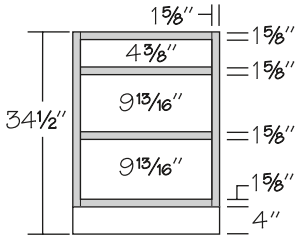

Desk Cabinets

Desk Base Cabinet

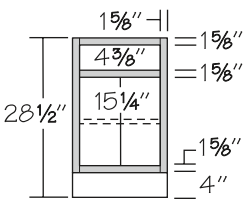

Desk Drawer Cabinet

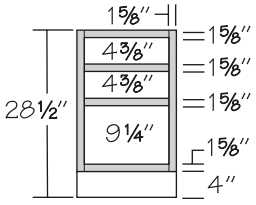

Desk File Pull-Out

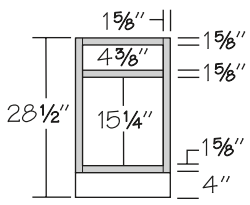

Kneehole Drawer*

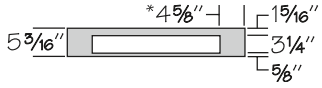

Trimmable in height to 4¾"
*Dimension for KDC36/33 is 3⅛"

Tall Cabinets

Vanity Linen & Utility Cabinets

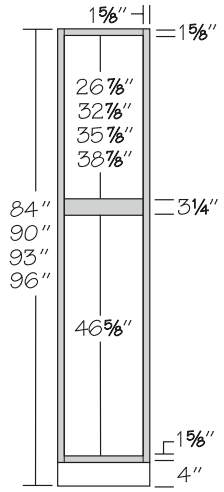

Oven Microwave Cabinet*

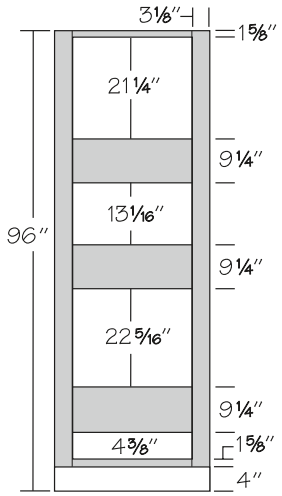

Single Oven Cabinet 4 Butt Doors*

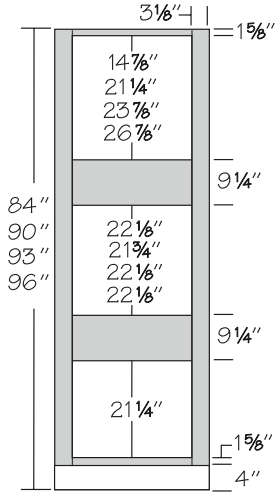

Single Oven Cabinet 4 Butt Doors, 1 Drawer*

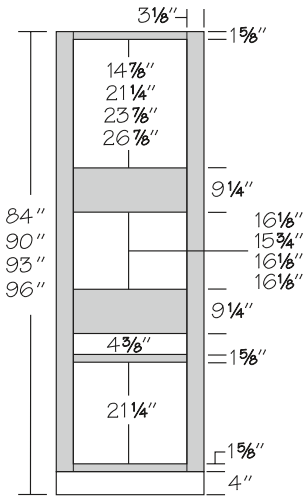

Single Oven Cabinet 4 Butt Doors, 2 Drawers*

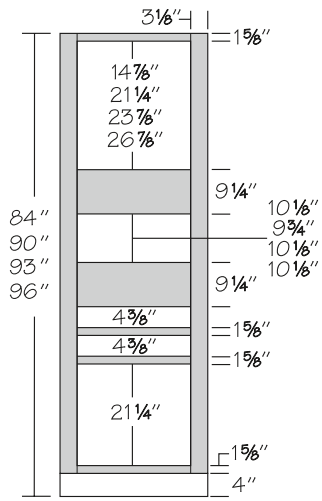

Single Oven Cabinet 2 Butt Doors, 4 Drawers*

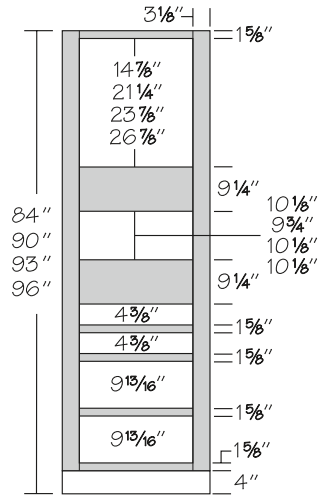

Double Oven Cabinet 1 Drawer*

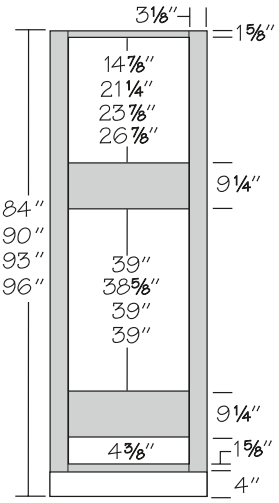

Double Oven Cabinet 1 Large Drawer*

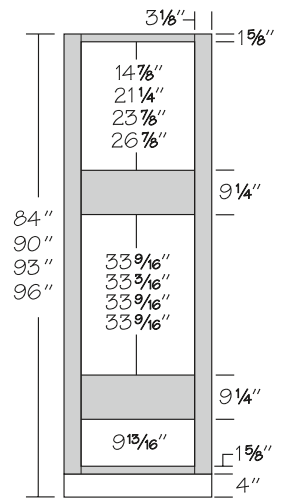

Double Oven Cabinet 2 Drawers*

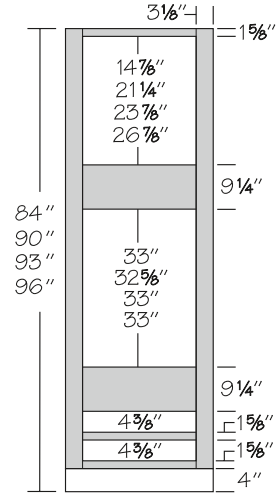

*Actual height of oven opening shown. For actual width, maximum width and maximum height dimensions, please refer to Cut Out Dimensions Chart in specific cabinet SKU box.

6-Way Adjustable Full Overlay Door Hinge

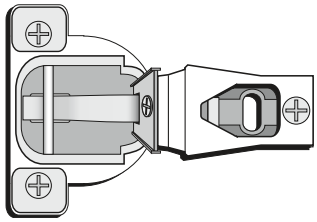

All steel construction with nickel-plated finish, Full Overlay hinge with self-closing feature that allows door to close unassisted when approximately 20–30 degrees open. Hinges permit doors to open to approximately 105 degrees. Six-way adjustability allows in/out, up/down, and side-to-side adjustments. Exceeds industry standard for durability. Standard feature on all Full Overlay (FOL) door styles. Hinge restrictors are available to order separately to limit doors to opening more than 86 degrees.

6-Way Adjustable Standard Overlay Door Hinge

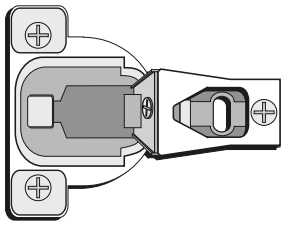

All steel construction with nickel-plated finish, Standard Overlay hinge with self-closing feature that allows door to close unassisted when approximately 20–30 degrees open. Hinges permit doors to open to approximately 105 degrees. Six-way adjustability allows in/out, up/down, and side-to-side adjustments. Exceeds industry standard for durability. Standard feature on all Standard Overlay (SOL) door styles. Hinge restrictors are available to order separately to limit doors to opening more than 86 degrees.

Side-Mounted Drawer Glides

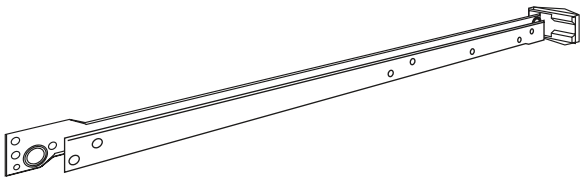

This glide system features twin self-aligning side-mounted drawer glides. They are constructed of epoxy coated steel for quiet opening and closing. Rollers are made of Delrin for smooth operation. **The side-mounted glides are a standard feature on all cabinet drawers in the Portfolio and Value Built Series. Portfolio Select, Portfolio, and Value Built feature side-mounted glides on all sliding shelves.**

Full-Extension CushionClose Hidden Glides

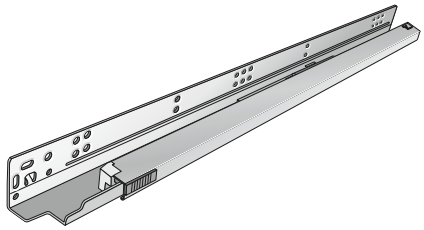

The full-extension CushionClose hidden glide system features dual-telescoping glide members that are supported by precision roller-carriage bearings providing smooth, stable and quiet operation. This glide system opens fully to provide complete access to drawer contents and features an integrated slow-closing mechanism. **Standard feature on Portfolio Select Series. Available as an upgrade on Portfolio Series.**

Metal Shelf Rest

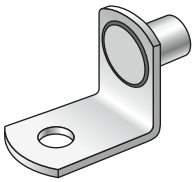

¼" steel, nickel plated. Standard feature on all wall cabinets, bookshelves and Open Frame Door cabinets.

Base Locking Shelf Rest

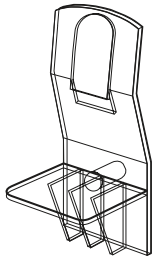

Locks shelves in place and prevents shelves from sliding. Designed to allow easy shelf removal. Molded from clear high-strength polycarbonate. Standard feature on all base and tall cabinets.

Mullion Shelf Rest

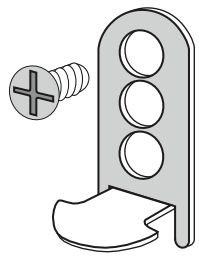

Allows for superior alignment of shelf with mullion. Metal construction. Six position adjustable. Standard feature on Mullion Frame Door cabinets.

Ceiling Height Requirements

This illustration specifies the ceiling height requirements for tall cabinets (linen, utility, and oven).

Requirements for Tall Cabinets

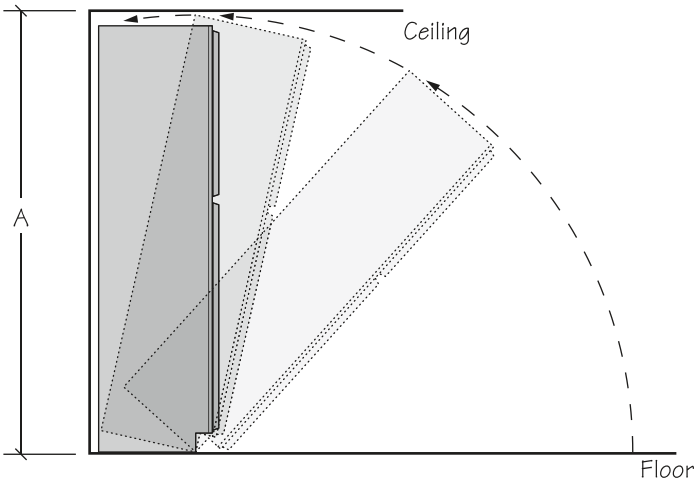

Height	Cabinet Depth	Minimum Ceiling Height A
84"	12"	84 9/16"
84"	18"	85 1/4"
84"	20 3/4"	85 13/16"
84"	24"	86 1/2"
90"	12"	90 1/2"
90"	18"	91 5/16"
90"	24"	92 5/16"
93"	12"	93"
93"	18"	93"
93"	24"	93"
96"	12"	96"
96"	18"	96"
96"	24"	96"

Notes:

- 93" and 96" high tall cabinets have 4" toe kick assembly shipped inside the cabinet

Installation Height Guidelines

These illustrations specify dimensions of the height guidelines for top alignment of wall and tall cabinets (linen, utility, and oven) installation.

84” Top Alignment Cabinet Installation

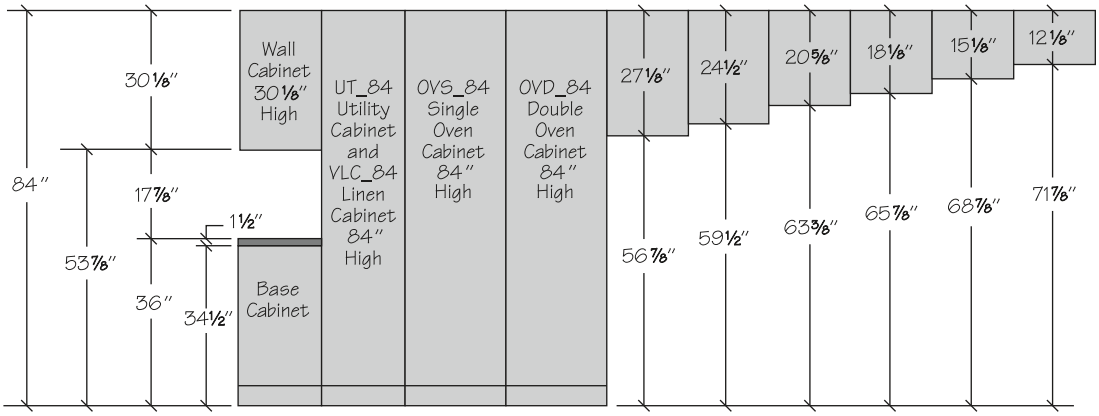

Notes:

- 84" top alignment cabinet installation includes wall cabinets (30⅛" high) installed 53⅞" above the finished floor, allowing 17⅞" clearance between the wall cabinets and a standard countertop height of 36" - dimensions are for reference only, refer to local building codes to ensure compliance
- Tall cabinetry (linen, utility, and oven) is 84" high
- **When selecting cabinetry for installation above or near any appliance, refer to the appliance manufacturer’s specifications for clearance and venting requirements**

90” Top Alignment Cabinet Installation

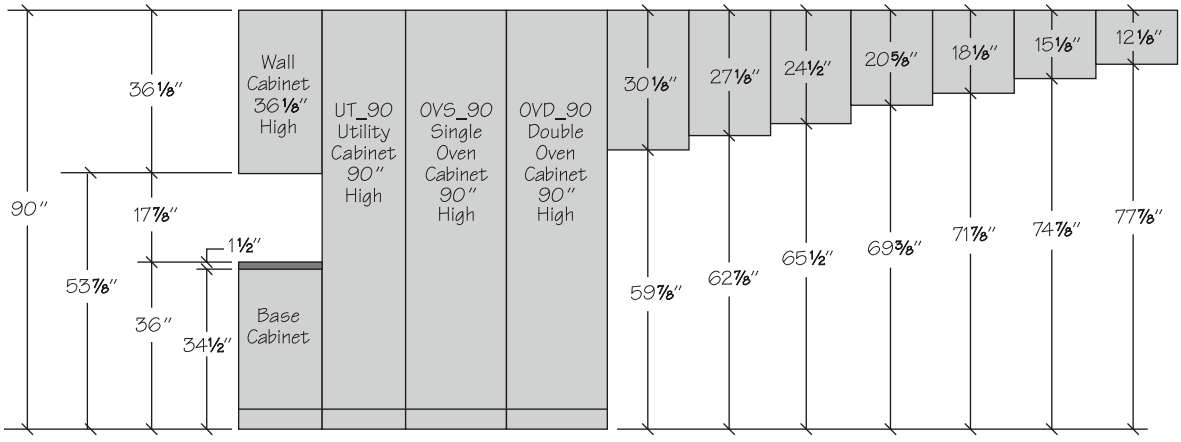

Notes:

- 90" top alignment cabinet installation includes wall cabinets (36⅛" high) installed 53⅞" above the finished floor, allowing 17⅞" clearance between the wall cabinets and a standard countertop height of 36" - dimensions are for reference only, refer to local building codes to ensure compliance
- Tall cabinetry (utility and oven) is 90" high
- **When selecting cabinetry for installation above or near any appliance, refer to the appliance manufacturer’s specifications for clearance and venting requirements**

93” Top Alignment Cabinet Installation

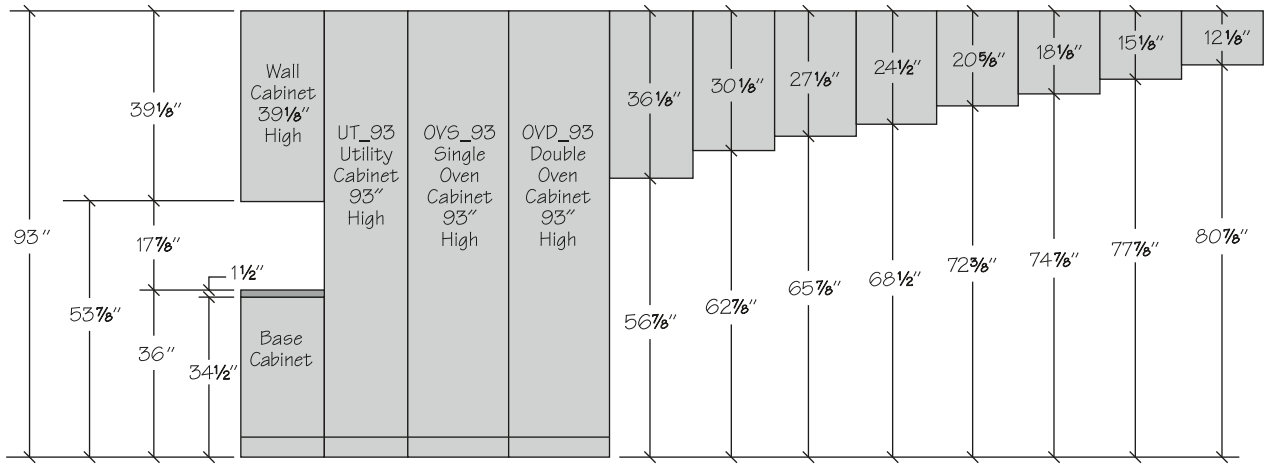

Notes:

- 93" top alignment cabinet installation includes wall cabinets (39⅛" high) installed 53⅞" above the finished floor, allowing 17⅞" clearance between the wall cabinets and a standard countertop height of 36" - dimensions are for reference only, refer to local building codes to ensure compliance
- Tall cabinetry (utility and oven) is 93" high
- **When selecting cabinetry for installation above or near any appliance, refer to the appliance manufacturer’s specifications for clearance and venting requirements**

96” Top Alignment Cabinet Installation

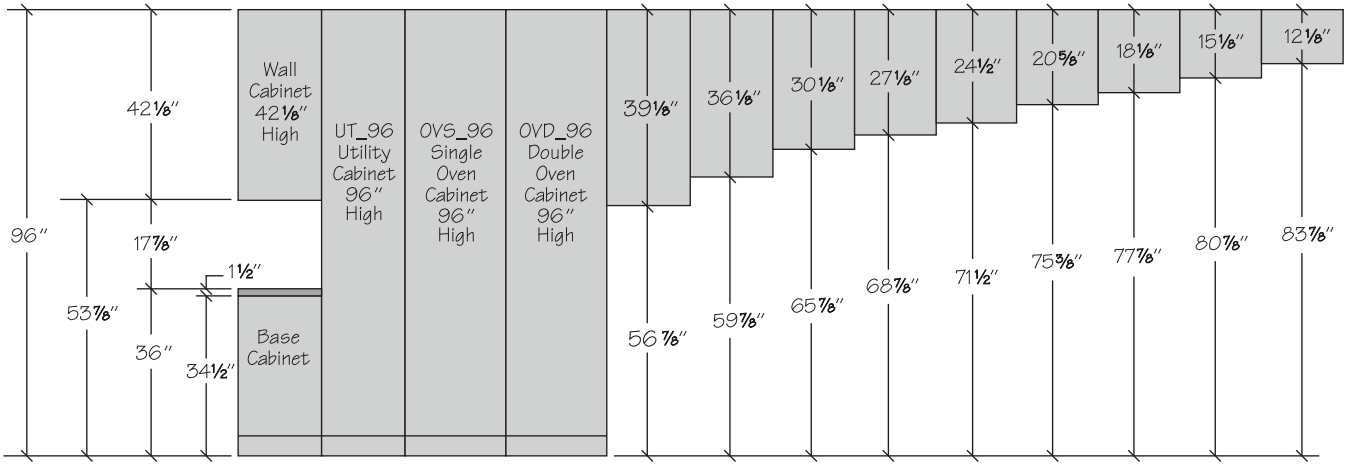

Notes:

- 96" top alignment cabinet installation includes wall cabinets (42⅛" high) installed 53⅞" above the finished floor, allowing 17⅞" clearance between the wall cabinets and a standard countertop height of 36" - dimensions are for reference only, refer to local building codes to ensure compliance
- Tall cabinetry (utility and oven) is 96" high
- **When selecting cabinetry for installation above or near any appliance, refer to the appliance manufacturer’s specifications for clearance and venting requirements**

Overlay Dimensions

The drawings shown below illustrate the relationship between the cabinet face frame and Standard Overlay (SOL) and Full Overlay (FOL) doors. They show the amount of the cabinet face frame that is visible when Standard Overlay doors or Full Overlay doors are selected.

Full Overlay

Full overlay (FOL) doors are sized to cover nearly all of the cabinet face frame. Full overlay door styles require decorative hardware. **To facilitate proper door operation, include at least a 1" filler between the hinged side of full overlay door styles and deeper adjacent objects including cabinets, walls, appliances, and countertops. Blind corners may require more space from the adjacent cabinet to accommodate decorative hardware clearance.**

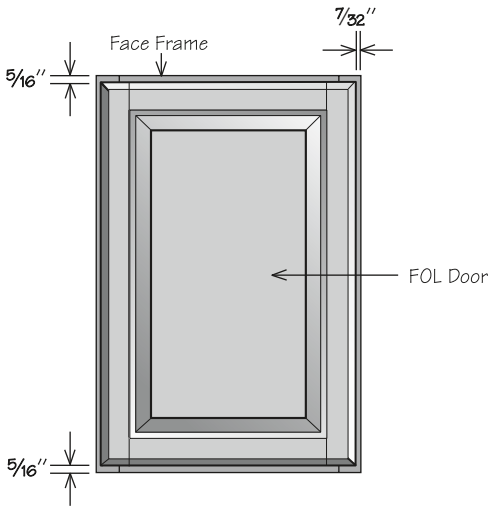

WALL CABINET FRONT

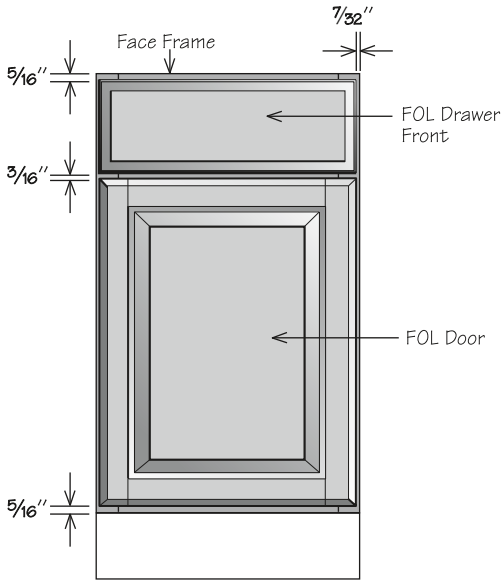

BASE CABINET FRONT

Standard Overlay

Standard overlay (SOL) doors are sized to show about an inch of the cabinet face frame, giving the door some visual depth. Some door styles do not require decorative hardware.

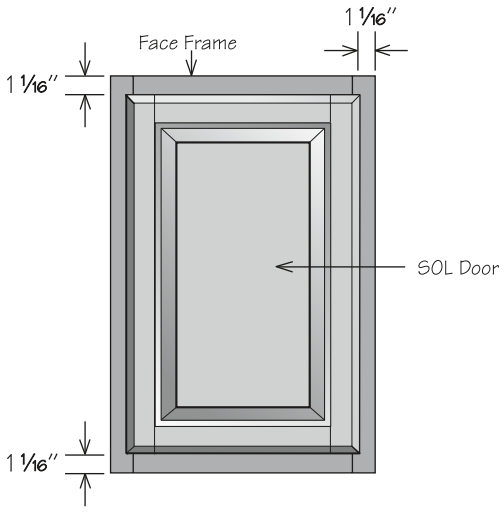

WALL CABINET FRONT

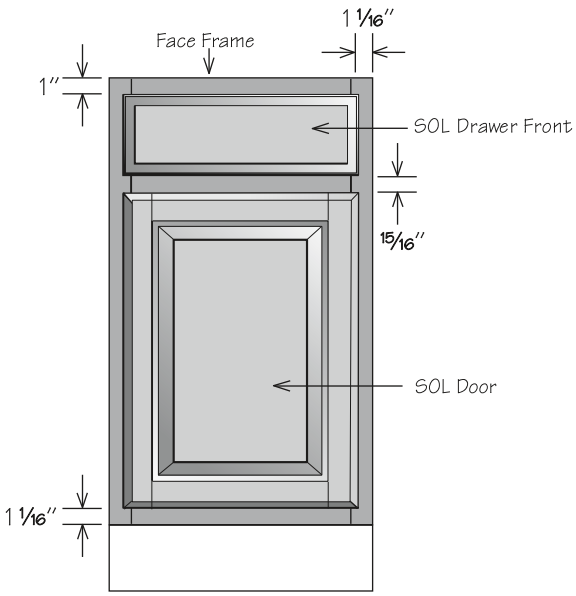

BASE CABINET FRONT

Notes

CONSTRUCTION OPTIONS

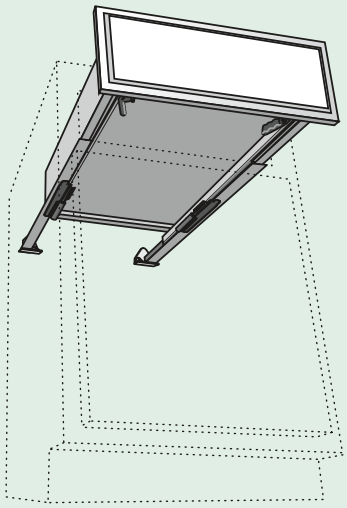

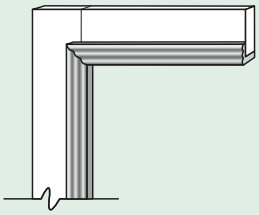

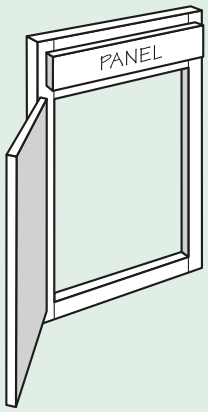

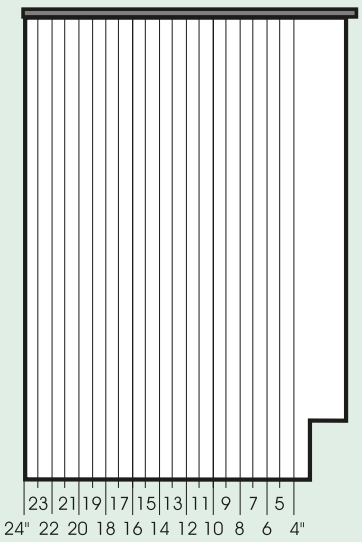

Construction Options Legend

Icons used in this guide are shown below and indicate which construction options are available for a particular product.

AH	Accessible Height Option
APC	All Plywood Construction Option
CFO	Cabinet Front Only Option
CCDW	CushionClose Full-Extension Dovetail Drawer Option
CCH	CushionClose Hinge Option
CCSS	CushionClose Sliding Shelf Option
FDS	Full Depth Shelf Option
FE	Furniture Ends Option
ID	Increased Depth Option
IF	Inverted Frame Option
MI	Matching Interior Option
PE	Plywood Ends Option
RD	Reduced Depth Option
RTK	Recessed Toe Kick Option
VTD	Void Top Drawer Option
VDO	Void Door Option
VTK	**Void Toe Kick Option** **NEW!** OPTION

Example:

When separate option boxes are listed, the modifications below it are only available for the series noted. If no series is noted, all options listed are available for Portfolio Select, Portfolio, and Value Built series.

When a square ■ or diamond ◆ symbol is in an option box, it indicates that the construction option is ONLY available for SKUs listed with that symbol.

All options without a symbol are available for all SKUs.

In this example, the ◆ diamond indicates that only W3015 BUTT and W3015 BUTT SD are available with Increased Depth (ID), while the ■ square indicates that only the non-SD cabinets are available with Matching Interior (MI) and Void Door (VDO) options.

Wall Cabinets · 2 Butt Doors

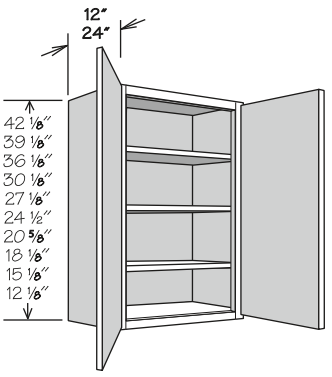

PORTFOLIO SELECT & POTFOLIO	VALUE BUILT
APC	CFO
CCH	ID ◆
CFO	MI ■
FE	RD
ID ◆	VDO ■
MI ■	
PE	
RD	
VDO ■	

12" DEEP

W3015 BUTT ■ ◆
W3015 BUTT SD ◆

24" DEEP

W3015 X 24DP BUTT ■
W3015 X 24DP BUTT SD

Premium & Glaze Premium Finish Cabinet Option

Our Premium and Glaze Premium finishes accentuate the detailing and textures of the cabinetry.

- Premium finishes feature paints that emphasize lines and rich detail with an inviting texture
- Glaze Premium finishes feature a painted base, with an added glaze that settles into the recesses, corners, and grooves to add definition and a distinctive patina

PREMIUM	FINISH	AVAILABLE COLLECTIONS
Painted Black	Black Paint	Beckley, Charleston, Corban, Kinsdale, Lausanne, Maddox, New Haven, Sierra Vista, Sonoma and Windsor
Painted Boulder	Dark Gray Paint	Beckley, Charleston, Corban, Kinsdale, Lausanne, Maddox, New Haven, Sierra Vista, Sonoma and Windsor
Painted Harbor	Light Gray Paint	Beckley, Charleston, Corban, Kinsdale, Lausanne, Maddox, New Haven, Sierra Vista, Sonoma and Windsor
Painted Linen	Crisp White Paint	Beckley, Charleston, Corban, Kinsdale, Lausanne, Maddox, New Haven, Sierra Vista, Sonoma and Windsor
Painted Mist	Light Blue Paint	Beckley, Charleston, Corban, Kinsdale, Lausanne, Maddox, New Haven, Sierra Vista, Sonoma and Windsor
Painted Navy	Dark Blue Paint	Beckley, Charleston, Corban, Kinsdale, Lausanne, Maddox, New Haven, Sierra Vista, Sonoma and Windsor
Painted Oat	**Gentle Taupe Paint**	**Beckley, Charleston, Corban, Kinsdale, Lausanne, Maddox, New Haven, Sierra Vista, Sonoma and Windsor**
Painted Sage	Soft Green Paint	Beckley, Charleston, Corban, Kinsdale, Lausanne, Maddox, New Haven, Sierra Vista, Sonoma and Windsor
Painted Stone	Soft Gray Paint	Beckley, Charleston, Corban, Kinsdale, Lausanne, Maddox, New Haven, Sierra Vista, Sonoma and Windsor
Painted Vanilla	Warm Soft White Paint	Beckley, Charleston, Corban, Kinsdale, Lausanne, Maddox, New Haven, Sierra Vista, Sonoma and Windsor

GLAZE PREMIUM	BASE FINISH	GLAZE	AVAILABLE COLLECTIONS
Painted Biscotti Glaze	Painted Vanilla	Neutral Brown Glaze	Beckley, Charleston, Corban, Kinsdale, Maddox, Sierra Vista and Windsor
Painted Ember Glaze	Painted Harbor	Warm Brown Gray Glaze	Beckley, Charleston, Corban, Kinsdale, Maddox, Sierra Vista and Windsor
Painted Pewter Glaze	Painted Linen	Deep Gray Glaze	Beckley, Charleston, Corban, Kinsdale, Maddox, Sierra Vista and Windsor

All Plywood Construction Option

APC

All Plywood Construction Option includes:

- ½" plywood sides, floors, and cabinet tops
- ¾" plywood shelves with edge banding
- ⅛" plywood captured back
- ½" plywood inset toe kick
- ½" plywood corner blocks (excluding BEA/BPP/BPPUS/BTDP cabinets or cabinets with a solid top)

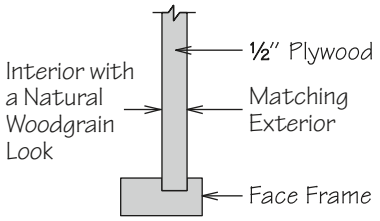

Notes:

- **Available for Portfolio Select and Portfolio Series only**
- **Portfolio door styles, without the CushionClose Full-Extension Dovetail Drawer Option, will feature standard drawer construction - CCDW upgrade recommended for APC construction**
- Standard base cabinets convert to full-depth plywood shelves
- Exterior sides finished to match specific cabinet box exterior
- Plywood will be visible from top and bottom of side panels
- Available for individual cabinets or entire kitchen
- All door styles feature standard interior sides with a natural woodgrain look and matching exterior sides
- May be combined with all construction options excluding Cabinet Front Only and Plywood Ends.
- Toe kick support blocks are not plywood
- Slide out accessories and drawer inserts will not feature All Plywood Construction
- All Plywood Construction refers to the cabinet box components and shelving as detailed above (certain parts and accessories are not available with this construction option)
- Plywood can consist of a combination of veneer and medium density fiberboard (MDF) layers to achieve superior product stability and finish quality. Plywood components meet the ANSI/HPVA hardwood and decorative plywood standards (www.decorativehardwoods.org)

Plywood Ends Option

PE

Plywood Ends Option includes:

- ½" plywood cabinet sides

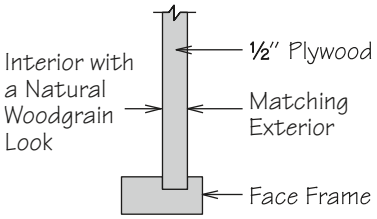

Notes:

- **Available for Portfolio Select and Portfolio Series only**
- Exterior sides finished to match cabinet exterior
- Plywood will be visible from top and bottom of side panels
- Available for individual cabinets or entire kitchen
- All door styles feature standard interior sides with a natural woodgrain look and matching exterior sides
- May be combined with all construction options excluding All Plywood Construction, Furniture Ends and Cabinet Front Only Option
- Plywood Ends refers to the cabinet box side panels as detailed above (certain parts and accessories are not available with this construction option)
- Plywood can consist of a combination of veneer and medium density fiberboard (MDF) layers to achieve superior product stability and finish quality. Plywood components meet the ANSI/HPVA hardwood and decorative plywood standards (www.decorativehardwoods.org)

CONSTRUCTION OPTION	PORTFOLIO SELECT & PORTFOLIO		
	Standard Construction	Plywood Ends Option (PE)	All Plywood Construction Option (APC)
Cabinet Sides	½" Engineered Wood	½" Plywood	½" Plywood
Cabinet Floor	½" Engineered Wood	½" Engineered Wood	½" Plywood
Cabinet Top (Wall Cabinets Only)	½" Engineered Wood	½" Engineered Wood	½" Plywood
Cabinet Back	⅛" Hardboard Substrate Captured	⅛" Hardboard Substrate Captured	⅛" Plywood Captured
Inset Toe Kick	½" Engineered Wood	½" Engineered Wood	½" Plywood
Corner Blocks	½" Engineered Wood	½" Engineered Wood	½" Plywood* *see APC option box for list of exclusions
Shelves	¾" Wall and ¾" Half-Depth Base Engineered Wood with Edge Banding	¾" Wall and ¾" Half-Depth Base Engineered Wood with Edge Banding	¾" Wall and ¾" Full-Depth Base Plywood with Edge Banding
Wall Cabinet Hanging Rails	½" Engineered Wood Top and Bottom Rails	½" Engineered Wood Top and Bottom Rails	½" Plywood Top and Bottom Rails
Base Cabinet Hanging Rails	¾" Hardwood Top Rail ½" Engineered Wood Bottom Rail	¾" Hardwood Top Rail ½" Engineered Wood Bottom Rail	¾" Hardwood Top Rail ½" Plywood Bottom Rail

Accessible Height Option

AH

The Accessible Height Option is available for most cabinets that feature a toe kick.

Notes:

- **Available for Portfolio Select and Portfolio Series only**
- This option reduces cabinet height by 2" off the toe kick area
  - » Toe kick boxes that are shipped separately on 93" and 96" high tall cabinets will also be reduced by 2" with this option
- May be combined with all construction options excluding Recessed Toe Kick, Cabinet Front Only Option or Void Toe Kick
- Any cabinet part above toe kick (face frames, doors, internal cabinet accessories, etc.) will not be altered by this modification

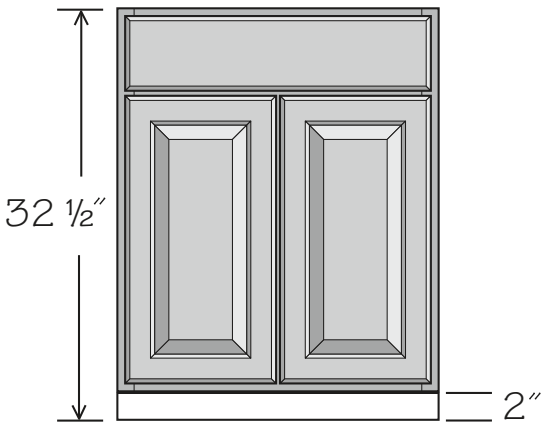

	34 ½" Base/Vanity	84" Tall	90" Tall	93" Tall	96" Tall
Modified Height	32 ½"	82"	88"	91"	94"

SERIES	SIDE-MOUNT GLIDES	CUSHIONCLOSE FULL-EXTENSION GLIDES
DRAWER		
Portfolio Select	—	Standard
Portfolio	Standard	Upgrade (CCDW)
Value Built		—
SLIDING SHELF		
Portfolio Select	Standard	Upgrade (CCSS)
Portfolio		
Value Built		—

SERIES	6-WAY ADJUSTABLE	CUSHIONCLOSE
HINGE		
Portfolio Select	—	Standard
Portfolio	Standard	Upgrade (CCH)
Value Built		—

CushionClose Hinge Option — CCH

The CushionClose Hinge Option features a slow-closing mechanism that helps reduce slams and noise.

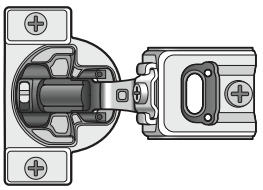

Notes:

- **Available for Portfolio Series only**
- Not for use on the following SKUs: BER_, BSS_, CAR_, WER_, or WTH_

CushionClose Dovetail Drawer Option — CCDW

The CushionClose Dovetail Drawer Option features ⅝" dovetail hardwood drawers with a full-extension glide and an integrated slow-close mechanism that reduces slamming and noise.

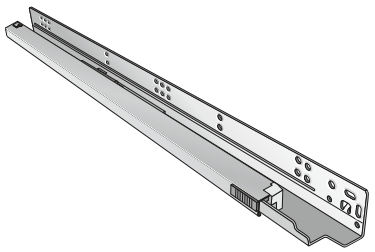

Notes:

- **Available for Portfolio Series only**
- Features ⅝" dovetail hardwood drawers
- Unique oil damper technology for whisper-quiet operation
- Wastebasket cabinets with this upgrade option feature heavy-duty, 100-pound rated, Full-Extension CushionClose Glides
- Decorative hardware strongly recommended

CushionClose Deep Dovetail Sliding Shelf Option — CCSS

The CushionClose Deep Dovetail Sliding Shelf Option provides all the features a 3½" high and ⅝" thick hardwood dovetail sliding shelf with an integrated slow-close mechanism that reduces slamming and noise.

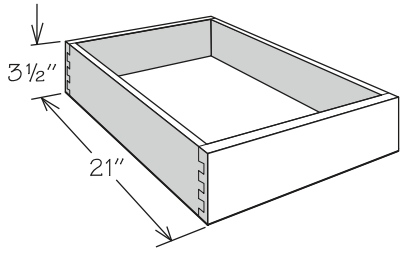

Notes:

- **Available for Portfolio Select and Portfolio Series only**
- Features 3½" high sliding shelf
- Features ⅝" dovetail hardwood drawers with MDF bottoms
- Unique oil damper technology for whisper-quiet operation

Reduced Depth Option

RD

The Reduced Depth Option should be used when ordering less than standard depth cabinets. The Reduced Depth Option is available in 1" increments; minimum depth is 4". Vanity and desk cabinets will reduce to standard reduced depth increments (e.g. vanity cabinets with RD-20 will measure 20" in depth).

Orders specifying Reduced Depth Option must show the total cabinet depth.

Example: Cabinet: B24
Option: RD-17 (reduced to 17" deep)

Notes:

- There is a potential tipping hazard for reduced depth cabinets until they are mounted to a wall
- Peninsula Base cabinets reduced to 11" or less will not have an inset toe kick
- Full-depth shelves are reduced in 1" increments to match Reduced Depth Option selected on cabinet(s)
- Half-depth shelves are reduced in 1" increments for cabinets reduced to 11" or less
- Adding the Reduced Depth Option does not remove adjustable shelves (where applicable)
- May be combined with all construction options excluding Increased Depth, Cabinet Front Only or Recessed Toe Kick when cabinets are reduced to 8" or less
- All cabinets reduced to 5" or less will not have an inset toe kick
- Reduced depth restrictions:
  - » Cabinets with factory installed sliding shelves are only available with RD-23 through RD-12
  - » 24" Deep Wall Top Hinge cabinets are only available with RD-23 through RD-8
  - » 12" Deep Wall Top Hinge cabinets are only available with RD-11 through RD-8
  - » Base End Angle (BEA12FH) cabinets are only available with RD-23 through RD-18
  - » Kneehole Drawer cabinets are only available with RD-20 through RD-12
  - » Two-Drawer Base cabinets are only available with RD-23 through RD-21
  - » 24" Deep Furniture Drawer cabinets are only available with RD-23 through RD-13
- When ordering reduced depth accessories, specify the depth of the cabinet for which the accessory is intended (e.g., SK3624 RD-21 would be ordered for a UT3624 X 84 RD-21)

OPTION CODE	ACTUAL DIMENSION			
Reduced Depth	**Drawer Depth (Full Extension)**	**Drawer Depth (Side-Mounted)**	**Sliding Shelf Depth**	**Sliding Shelf Depth With CCSS Upgrade**
RD-23	18"	18"	18"	18"
RD-22	18"	18"	18"	18"
RD-21	18"	18"	16"	18"
RD-20	15"	15"	16"	15"
RD-19	15"	15"	16"	15"
RD-18	15"	15"	15"	15"
RD-17	12"	12"	14"	12"
RD-16	12"	12"	13"	12"
RD-15	12"	12"	12"	12"
RD-14	9⅞"	9"	11"	9"
RD-13	9⅞"	9"	10"	9"
RD-12	9⅞"	9"	9"	9"
RD-11 to RD-6	No Drawer	No Drawer	Not Available	Not Available
RD-5 or RD-4	No Drawer	No Drawer	Not Available	Not Available

Increased Depth Option

ID

The Increased Depth Option is available for most Wall cabinets up to 36" wide and all Bookshelves. The Increased Depth Option is available in 1" increments; maximum depth is 24".

Orders specifying Increased Depth Option must show the total cabinet depth.

Example: Cabinet: W1530
Option: ID-14 (increased to 14" deep)

Notes:

- May be combined with all construction options excluding Reduced Depth and Cabinet Front Only Option
- Adjustable shelves are increased in 1" increments to match Increased Depth Option selected on cabinet(s)
- Wall cabinets and bookshelves increased up to and including 18" deep can be mounted using standard installation procedures
- Wall cabinets and bookshelves increased to 19" deep and over must be stacked, floor mounted, or installed over a refrigerator
- All increased depth cabinets must be securely attached in one of the following combinations: to studs in back wall and both sides OR to studs in back wall, one side and top (e.g. two adjacent cabinets or one adjacent cabinet and a wall)

Full Depth Shelf Option

FDS

The Full Depth Shelf Option is available for most Base cabinets and will convert the half-depth shelf to a full-depth shelf.

Notes:

- Available for individual cabinets
- Not available for cabinets with accessories
- May be combined with the Reduced Depth Option down to 13"
- Cannot be ordered with All Plywood Construction

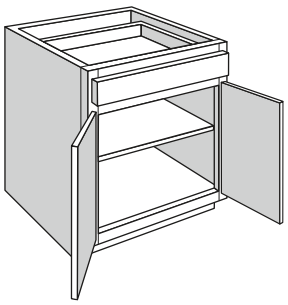

Cabinet Front Only Option

CFO

The Cabinet Front Only Option is available for most cabinets with a frame.

Notes:

- Cannot be combined with any construction option
- This option consists of the cabinet frame, door(s), drawer front(s), and hinges
- Toe kicks are not included
- This option is only available for cabinets without accessories

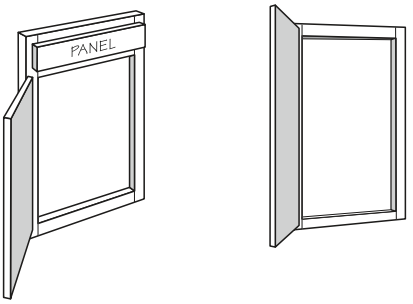

Furniture Ends Option

FE

Furniture Ends Option includes:

- ¾" plywood cabinet sides

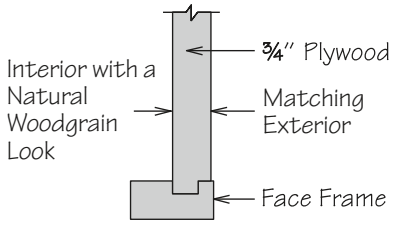

Notes:

- **Available for Portfolio Select and Portfolio Series only**
- Exterior sides feature plywood finished to match specific cabinet box exterior
- Plywood is visible on top and bottom of side panels
- All door styles feature standard interior sides with a natural woodgrain look and matching exterior sides
- Available for individual cabinets except Base End Angle (BEA24 FH) and Wall End Angle (WEA12) cabinets
- Both side panels convert to ¾" plywood sides except Base End Angle (BEA12 FH) cabinets which converts the 12" side panel only
- May be combined with all construction options excluding Plywood Ends and Cabinet Front Only Option
- End panels are not required for installation of decorator matching doors or the exposed ends of cabinets with the Furniture Ends Option
- Cabinet Angle Molding (CAM8) cannot be used with cabinets with the Furniture Ends Option
- Sink Front Return (SFR R/L) with the Furniture Ends Option will include a rabbetted front edge
- A seam will be visible between stacked cabinets and on 93" and 96" tall cabinets between the toe kick box and the cabinet. Recommendations to conceal this seam:
  - » Use decorative molding (e.g., Batten Molding or Ogee Pilaster Molding)
  - » Use a Column Filler or Wood Tall End Panel
- Plywood can consist of a combination of veneer and MDF layers to achieve superior product stability and finish quality. Plywood components meet the ANSI/HPVA hardwood and decorative plywood standards (decorativehardwoodsassociation.org).

Inverted Frame Option

IF

The Inverted Frame Option is available for most standard base cabinets and base cabinets with accessories.

Notes:

- May be combined with all construction options excluding Cabinet Front Only and Void Top Drawer Option
- Drawer(s) below full cabinet floor
- Adjustable shelf is included
- Back is not predrilled for Sliding Shelves (SSK's)

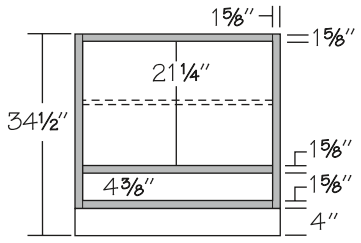

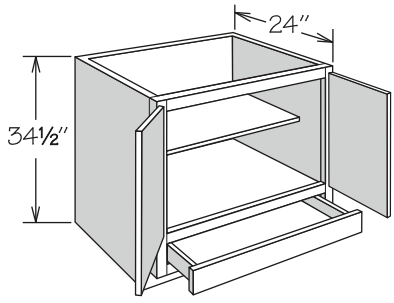

Recessed Toe Kick Option

RTK

The Recessed Toe Kick Option is available on most Base, Desk and Vanity base cabinetry. When the Recessed Toe Kick Option is selected, left, right or both must be specified.

Notes:

- May be combined with all construction options excluding Accessible Height Option, Cabinet Front Only, Void Toe Kick and the Reduced Depth Option when cabinets are reduced to 8" or less
- Recommended for cabinets at the end of a run, especially in island and peninsula designs
- Recessed side(s) are constructed of ½" thick unfinished plywood and are recessed 3½" to match front of cabinet
- Recessed Toe Kick box is not flush on non-recessed side
- Blind Corner Base cabinets are only available with the Recessed Toe Kick Both (RTKB) Option
- Base End Angle (BEA_ FH), Base Pantry Pull Out (BPP_), Base Pantry Pull Out Utensil Storage (BPPUS_), Base Tray Divider Pull Out (BTDP9), Tray Base (TB9 _) cabinets are not available with the Recessed Toe Kick Both Option (RTKB)
- Not available for Peninsula Base cabinets with the Reduced Depth Option of RD-11 and lower
- For Peninsula Base cabinets, the working drawer side indicates the front of the cabinet in order to correctly select Recessed Toe Kick Right (RTKR) or Left (RTKL)
- Peninsula Base cabinets ordered with Recessed Toe Kick Option must be secured to the floor through the cabinet bottom into bracing secured to the floor
- Base toe kick (BTK8) required for front and any exposed side(s)

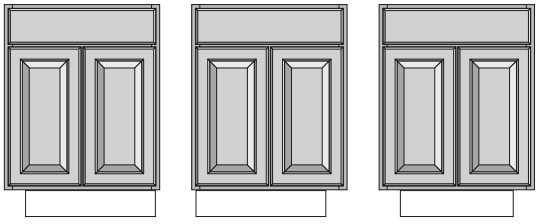

RTKL RTKR RTKB

Void Toe Kick Option

NEW! OPTION

VTK

The Void Toe Kick Option is available for most Base, Desk, Vanity, and Tall cabinets that feature a toe kick (excludes 93" and 96" high tall cabinets that ship toe kick assembly separately).

Notes:

- This option removes the toe kick
- Both cabinet side panels need to be supported from the floor and the cabinet properly secured in position.
- Allows cabinet to be used with decorative feet or a decorative platform.
- Not intended to be used in a “floating cabinet” application.
- May be combined with all construction options excluding Accessible Height, Recessed Toe Kick or Cabinet Front Only Option
- Any cabinet part above toe kick (face frames, doors, internal cabinet accessories, etc.) will not be altered by this modification



Void Top Drawer Option

VTD

The Void Top Drawer Option is available for most 3 Drawer Base, 4 Drawer Base, Base with Sliding Shelves, Base with Pot & Pan Organizer and Peninsula Base cabinets.

Notes:

- May be combined with all construction options excluding Cabinet Front Only and Inverted Frame Option
- This option removes the drawer body and glide system and replaces it with a false panel on any top drawer(s)
- On cabinets with multiple top drawers, all top drawers will be voided
- When using an appliance, the interior height clearance is 7⅝" from the top of the cabinet to the top of the door/drawer opening below the voided drawer
- Subtract 1½" from width and depth for available top opening – removal of corner blocks may be required
- Removal of the top rail is not recommended
- Refer to appliance manufacturer's specifications for adequate clearances and required installation materials

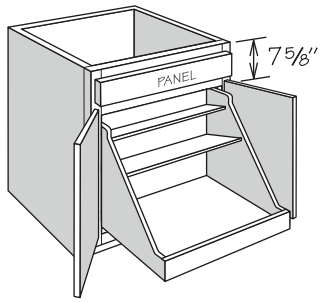

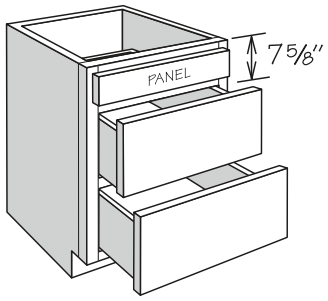

Void Door Option

VDO/VDM

The Void Door Option is available for most wall cabinets. All void door cabinets ship without doors or hinges – center stiles and adjustable shelves will remain. Cabinet frames are pre-drilled for door hinges. All void door Wall Top Hinge Cabinets will ship without door, lid stays, and hinges.

Refer to the descriptions below to select the correct option for your layout:

- VDO-DFH (Drilled For Hinges)
- VDM-SBAM (Single Bead Accent Molding)
- VDM-SAM (Shaker Accent Molding)

Notes:

- May be combined with all construction options excluding Cabinet Front Only Option
- Can be used to create decorative open cabinets
- Decorative accent moldings will conceal hinge holes
- Molding is to be cut and field installed at the job site
- When matching interior is desired, the Matching Interior Option must be selected separately

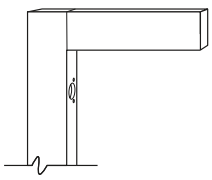

VDO-DFH
Drilled For Hinges

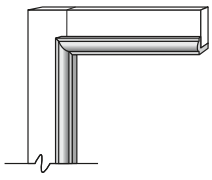

VDO-SBAM
Single Bead Accent Molding

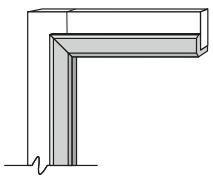

VDO-SAM
Shaker Accent Molding

Matching Interior Option

MI

The Matching Interior Option is available for Wall cabinets (with the exceptions noted below), Utility cabinets, Vanity Linen cabinets, and Refrigerator Return Panels. This option matches the cabinet's interior, top and bottom to that of the cabinet's box exterior.

Notes:

- May be combined with all construction options excluding Cabinet Front Only
- Not available for wall cabinets with a standard matching interior (including all Specialty Door cabinets)
- All Plywood Construction Option (APC), Furniture End Option (FE), or Plywood End Option (PE) is recommended when Matching Interior (MI) is selected
- Standard construction cabinetry with the Matching Interior Option features two-sided engineered wood side panels finished to match cabinet box exterior
- Cabinetry with the All Plywood Construction Option (APC), Furniture Ends Option (FE), or Plywood Ends Option (PE) features two-sided plywood side panels finished to match cabinet box exterior
- Matching Interior cabinetry with the All Plywood Construction Option features ¾" plywood shelves finished to match cabinet box exterior
- Recommended for wall cabinets with the Void Door Option (VDO)
- All finished surfaces of the Wall, Utility, and Vanity Linen cabinets will be color matched including shelves, back, interior and exterior of returns, top and bottom
- Surfaces that are not finished (including hanging rails, tops/bottoms of side panels, cabinet backs, etc.) will remain unfinished
- Interior accessories in Matching Interior cabinets will remain natural finish (e.g., spice rack kit, deep dovetail sliding shelves, pantry swing-out kit)

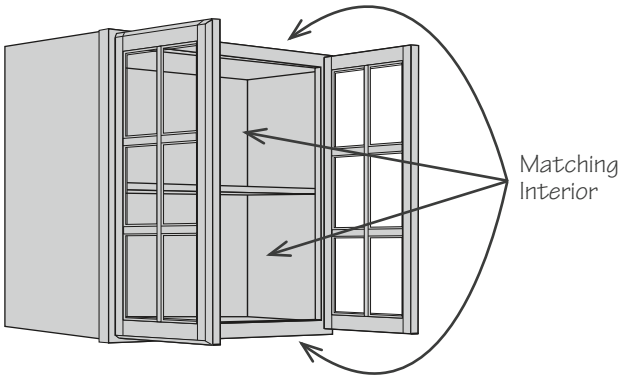

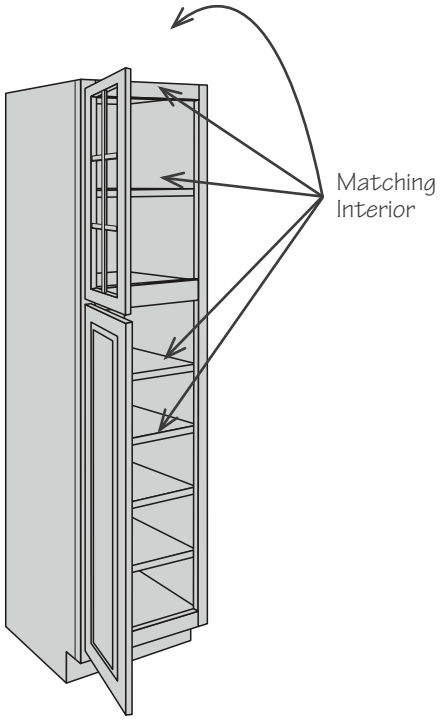

Specialty Door Options

SD

Specialty Door Option cabinets are available for most wall, utility and vanity linen cabinet sizes. All Specialty Door Option cabinets include Matching Interior as standard and require one of the specialty door options below. Specialty door options for utility and vanity linen cabinets apply to top door(s) only.

Open Frame Door (OFD) notes:

- Features door frame only with no mullions or center panel
- Decorative glass inserts and appropriate glass clips are shipped separately from the cabinet for field installation – see pages 58–59 for available glass inserts
- See page 55 for door style profiles

Mullion Frame Door (MFD) notes:

- Features grid-style mullions
- Not available for Wall Top Hinge cabinets
- Decorative glass inserts and appropriate glass clips are shipped separately from the cabinet for field installation – see pages 58–59 for available glass inserts
- See pages 56–57 for door style profiles

SPECIALTY DOOR AVAILABILITY BY SIZE

Door Width	Door Height									
	12" High Wall	15" High Wall	18" High Wall	21" High Wall	24" High Wall	27" High Wall	30" High Wall	36" High Wall	39" High Wall	42" High Wall
12" Wide	●	●	●		●		●	●	◆	●
13" Wide	●	●	●		●		●	●	◆	●
15" Wide	●	●	●	◆	●	◆	●	●	◆	●
16" Wide	◆	●	●	◆	●		●	●	◆	●
18" Wide	●	●	●	◆	●		●	●	◆	●
18½" Wide	●	●	●	●						
19" Wide	●	●	●	◆	●		●	●		●
21" Wide	●	●	●		●		●	●	◆	●
30" Wide		■	■							
36" Wide		■	■							
42" Wide	■									

● Available with all Specialty Door Options

■ Wall Top Hinge cabinets only – not available with MFD Option

◆ Available Portfolio Select and Portfolio Series only

SPECIALTY DOOR OFFERING BY STYLE		
Portfolio Select Series		
Door Style	**OFD**	**MFD**
Charleston	●	
New Haven	●	
Sierra Vista	●	●
Windsor	●	●
Portfolio Series		
Door Style	**OFD**	**MFD**
Barnett	●	
Beckley	●	●
Corban	●	
Downing	●	
Kinsdale	●	●
Lausanne	●	
Maddox	●	
Sonoma	●	
Value Built Series		
Door Style	**OFD**	**MFD**
Canton	●	●
Fairfield	●	●

Open Frame Door Profiles

OFD

PROFILE FOR:
- Canton
- Fairfield
- Windsor

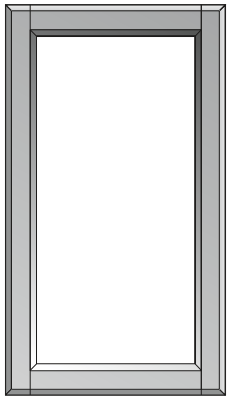

PROFILE FOR:
- Sierra Vista

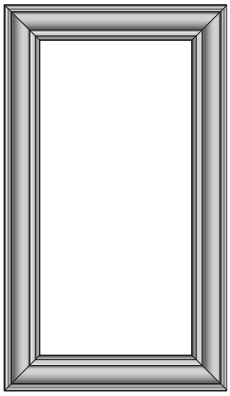

PROFILE FOR:
- Kinsdale

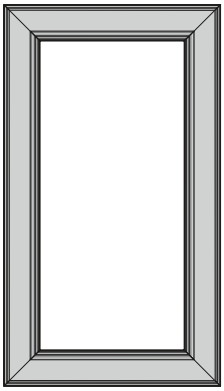

PROFILE FOR:
- Downing

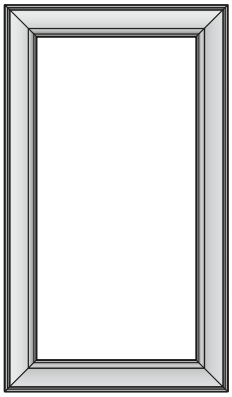

PROFILE FOR:
- Maddox

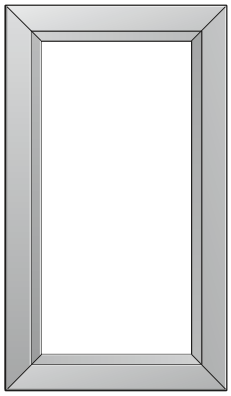

PROFILE FOR:
- Charleston

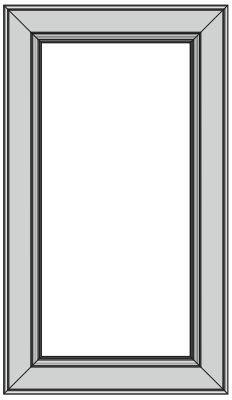

PROFILE FOR:
- Beckley

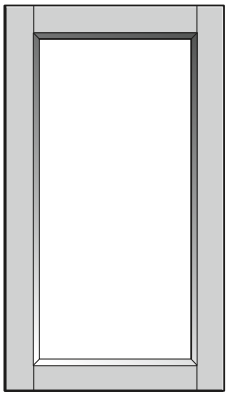

PROFILE FOR:
- Lausanne
- New Haven

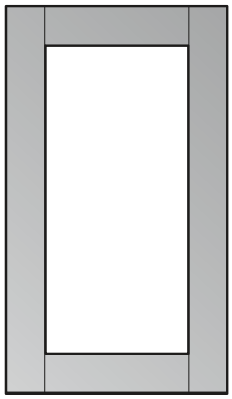

PROFILE FOR:
- Barnett
- Sonoma

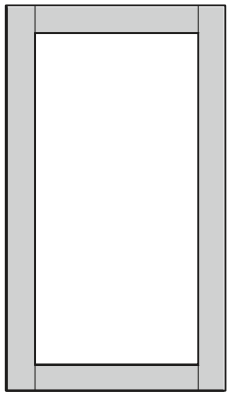

PROFILE FOR:
- Corban

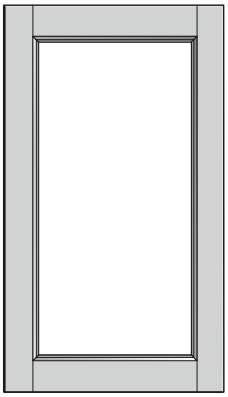

Mullion Frame Door Profiles

MFD

PROFILE FOR:

- Canton
- Fairfield
- Windsor

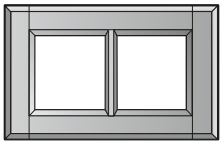

12" High Wall Cabinet

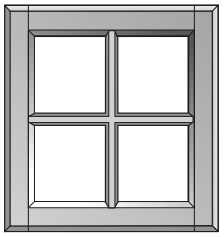

15", 18", 21", 24" or 27"
High Wall Cabinet

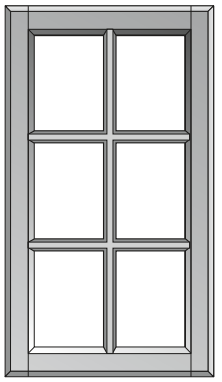

30" or 36" High Wall Cabinet
84" or 90" High Utility Cabinet
84" High Vanity Linen Cabinet

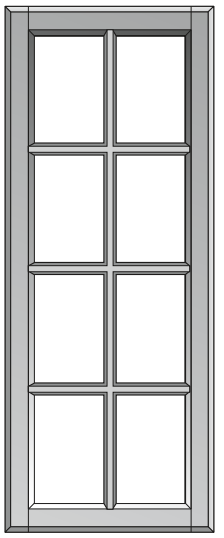

39" or 42" High Wall Cabinet
93" or 96" High Utility Cabinet

PROFILE FOR:

- Sierra Vista

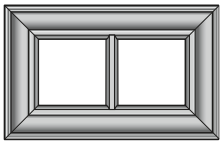

12" High Wall Cabinet

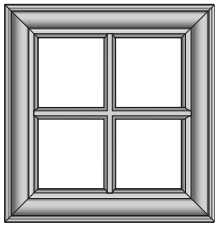

15", 18", 21", 24" or 27"
High Wall Cabinet

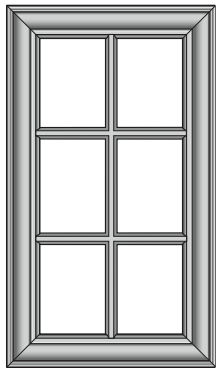

30" or 36" High Wall Cabinet
84" or 90" High Utility Cabinet
84" High Vanity Linen Cabinet

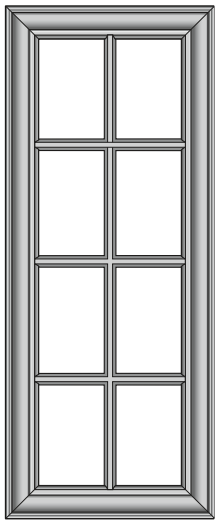

39" or 42" High Wall Cabinet
93" or 96" High Utility

Mullion Frame Door Profiles

MFD

PROFILE FOR:
- Kinsdale

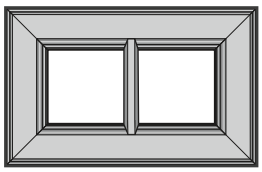

12" High Wall Cabinet

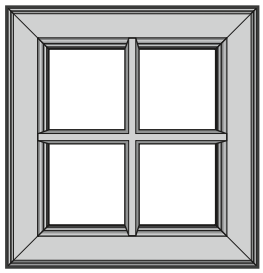

15", 18", 21", 24" or 27"
High Wall Cabinet

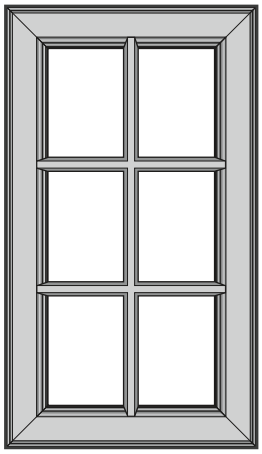

30" or 36" High Wall Cabinet
84" or 90" High Utility Cabinet
84" High Vanity Linen Cabinet

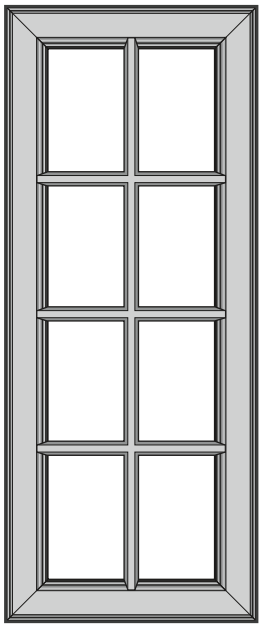

39" or 42" High Wall Cabinet
93" or 96" High Utility

PROFILE FOR:
- Beckley

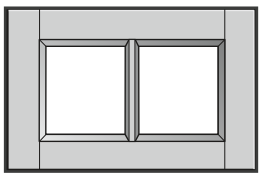

12" High Wall Cabinet

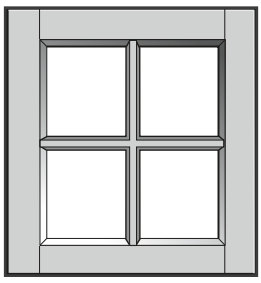

15", 18", 21", 24" or 27"
High Wall Cabinet

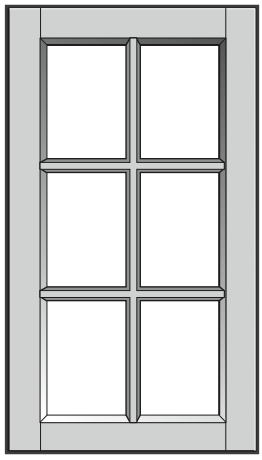

30" or 36" High Wall Cabinet
84" or 90" High Utility Cabinet
84" High Vanity Linen Cabinet

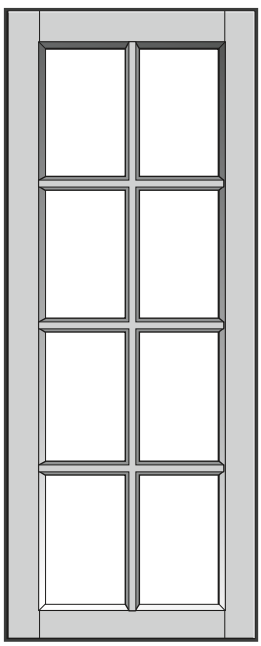

39" or 42" High Wall Cabinet
93" or 96" High Utility

Clear Glass

OFD
MFD



- ⅛" thick panel
- Clear glass
- Tempered safety glass
- Includes appropriate Decorative Glass Clips
- Order as DGI-____ CLEAR, refer to Parts Directory for nomenclature and dimensions

Derbyshire Seeded Glass

OFD
MFD



- 5⁄16" thick panel
- Clear seeded glass
- Laminated safety glass
- Includes appropriate Decorative Glass Clips
- Order as DGI-____ DERBYSHIRE, refer to Parts Directory for nomenclature and dimensions

Frosted Glass

OFD
MFD



- ⅛" thick panel
- Frosted glass with etched finish
- Tempered safety glass
- Includes appropriate Decorative Glass Clips
- Order as DGI-____ FROSTED, refer to Parts Directory for nomenclature and dimensions

Frosted Ash Glass

OFD
MFD



- ⅛" thick panel
- Gray tinted glass
- Tint is manufactured in material - not a film
- Tempered safety glass
- Includes appropriate Decorative Glass Clips
- Order as DGI-__FROSTED ASH, refer to Parts Directory for nomenclature and dimensions

Impression Glass

OFD
MFD



- ⅛" thick panel
- Sculptural glass
- Tempered safety glass
- Includes appropriate Decorative Glass Clips
- Order as DGI-__IMPRESSION, refer to Parts Directory for nomenclature and dimensions

Meredith Glass

OFD



- ¼" overall thickness (⅛" beveled edge thickness)
- Clear glass design with 1¼" wide beveled edges
- Tempered safety glass
- Includes appropriate Decorative Glass Clips
- Order as DGI-____ MEREDITH, refer to Parts Directory for nomenclature and dimensions

Ribbed Glass

OFD
MFD



- 1/8" thick panel
- Clear ribbed glass
- Tempered safety glass
- Includes appropriate Decorative Glass Clips
- Not available for Wall Top Hinge Cabinets
- Order as DGI-____ RIBBED, refer to Parts Directory for nomenclature and dimensions

Prepped for Glass

OFD
MFD

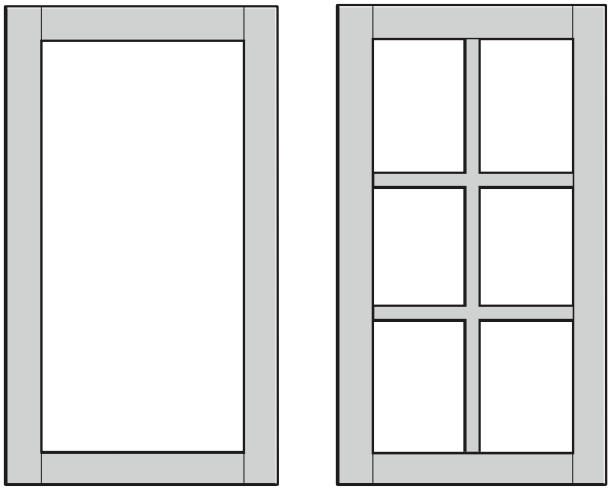

- For customer installed inserts up to 5/16" thick
- Refer to pages 55–57 for standard profiles
- Decorative Glass Clips not included—order separately

Decorative Glass Clips

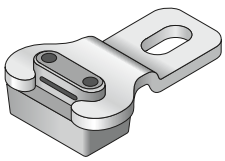

CLIP DGI 1/8

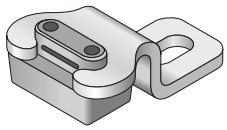

CLIP DGI 5/16

Glass Insert	CLIP DGI 1/8	CLIP DGI 5/16
Clear	●	
Derbyshire		●
Frosted	●	
Frosted Ash	●	
Impression	●	
Meredith	●	
Ribbed	●	

- For installation of decorative glass insert
- Order one bag (six clips) per door

CLIP DGI 1/8
CLIP DGI 5/16

Notes

WALL CABINETS

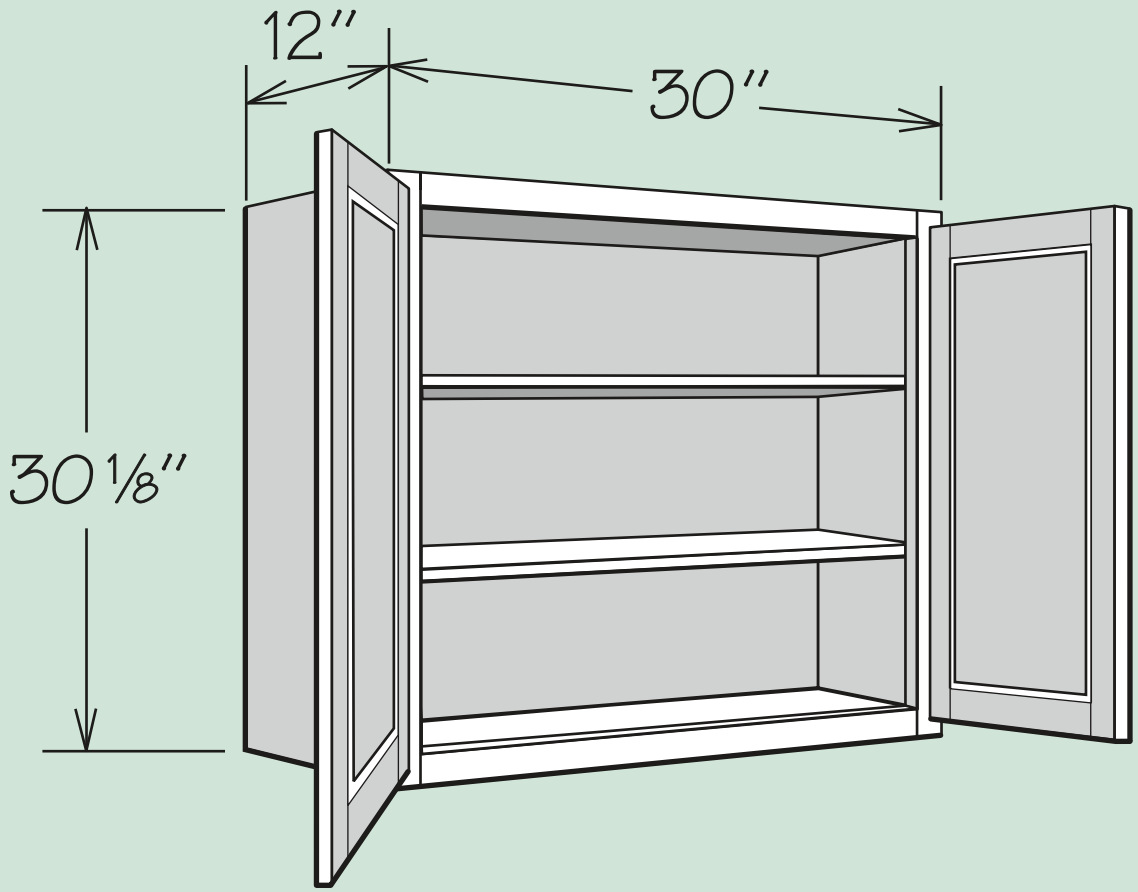

Wall Cabinets · 1 Door

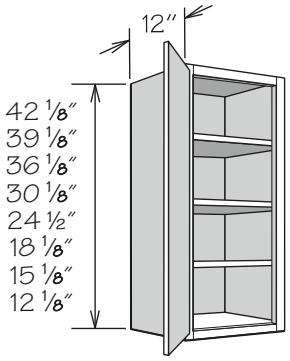

42" High Shown

- Cabinets indicated with an asterisk (*) are available for Portfolio Select and Portfolio Series only
- Specialty Door cabinets (SD) feature Matching Interior standard and require a specialty door selection
- Must be ordered as hinged left or right
- 18", 15" and 12" high wall cabinets are not drilled for adjustable shelf
- CCH option is available on Portfolio Series only

PORTFOLIO SELECT & POTFOLIO	VALUE BUILT
APC	CFO
CCH	ID
CFO	MI ■
FE	RD
ID	VDO ■
MI ■	
PE	
RD	
VDO ■	

12" DEEP

42"H • 3 Shelves
W942 ■
W1242 ■
W1542 ■
W1842 ■
W2142 ■
W1242 SD
W1542 SD
W1842 SD
W2142 SD

39"H • 3 Shelves
*W939 ■
*W1239 ■
*W1539 ■
*W1839 ■
*W2139 ■
*W1239 SD
*W1539 SD
*W1839 SD
*W2139 SD
*N/A for Value Built

36"H • 2 Shelves
W936 ■
W1236 ■
W1536 ■
W1836 ■
W2136 ■
W1236 SD
W1536 SD
W1836 SD
W2136 SD

30"H • 2 Shelves
W930 ■
W1230 ■
W1530 ■
W1830 ■
W2130 ■
W2430 ■
W1230 SD
W1530 SD
W1830 SD
W2130 SD

24"H • 1 Shelf
W1224 ■
W1524 ■
W1824 ■
W2124 ■
W1224 SD
W1524 SD
W1824 SD
W2124 SD

18"H • No Shelf
W1218 ■
W1518 ■
W1818 ■
W2118 ■
W1218 SD
W1518 SD
W1818 SD
W2118 SD

15"H • No Shelf
W1215 ■
W1515 ■
W1815 ■
W2115 ■
W1215 SD
W1515 SD
W1815 SD
W2115 SD

12"H • No Shelf
W1212 ■
W1512 ■
W1812 ■
W2112 ■
W1212 SD
W1512 SD
W1812 SD
W2112 SD

Wall Cabinets · 2 Doors

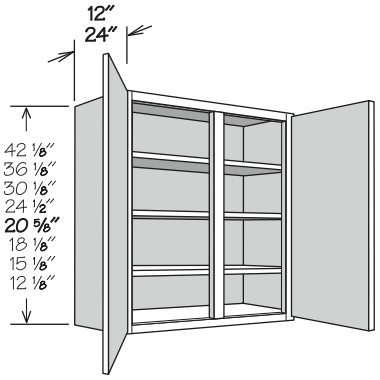

42" High Shown

- Cabinets indicated with an asterisk (*) are available for Portfolio Select and Portfolio Series only
- Specialty Door cabinets (SD) feature Matching Interior standard and require a specialty door selection
- 24" deep cabinets must be installed by:
  - » Securely attaching to studs in back wall and both sides or to studs in back wall, one side and top (e.g. two adjacent cabinets or one adjacent cabinet and a wall)
  - » And must be either stacked, floor mounted or installed over a refrigerator
- 21", 18", 15" and 12" high wall cabinets are not drilled for adjustable shelf
- Center shelf support provided (where applicable)
- CCH option is available on Portfolio Series only

PORTFOLIO SELECT & POTFOLIO	VALUE BUILT
APC	CFO
CCH	MI ■
CFO	RD
FE	VDO ■
MI ■	
PE	
RD	
VDO ■	

12" DEEP

42"H • 3 Shelves
W3942 ■
W4242 ■
W3942 SD
W4242 SD

36"H • 2 Shelves
W3936 ■
W4236 ■
W3936 SD
W4236 SD

30"H • 2 Shelves
W3930 ■
W4230 ■
W4830 ■
W3930 SD
W4230 SD

24"H • 1 Shelf
W3924 ■
W4224 ■
W3924 SD
W4224 SD

21"H • No Shelf
W3921 ■
*W3921 SD
*N/A for Value Built

18"H • No Shelf
W3918 ■
W4218 ■
W3918 SD
W4218 SD

15"H • No Shelf
W3915 ■
W3915 SD

12"H • No Shelf
W3912 ■
W3912 SD

24" DEEP

24"H • 1 Shelf
W3924 X 24 DP ■
W3924 X 24 DP SD

21"H • No Shelf
W3921 X 24 DP ■
*W3921 X 24 DP SD
*N/A for Value Built

18"H • No Shelf
W3918 X 24 DP ■
W3918 X 24 DP SD

15"H • No Shelf
W3915 X 24 DP ■
W3915 X 24 DP SD

12"H • No Shelf
W3912 X 24 DP ■
W4212 X 24 DP ■
W3912 X 24 DP SD

Wall Cabinets · 2 Butt Doors

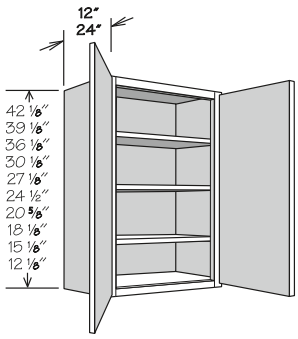

42" High Shown

- Specialty Door cabinets (SD) feature Matching Interior standard and require a specialty door selection
- 24" deep cabinets feature half-depth shelf where applicable
- 24" deep cabinets must be installed by:
  - » Securely attaching to studs in back wall and both sides or to studs in back wall, one side and top (e.g. two adjacent cabinets or one adjacent cabinet and a wall)
  - » And must be either stacked, floor mounted or installed over a refrigerator
- 21", 18", 15" and 12" high wall cabinets are not drilled for adjustable shelf

PORTFOLIO SELECT & POTFOLIO	VALUE BUILT
APC	CFO
CCH	ID ◆
CFO	MI ■
FE	RD
ID ◆	VDO ■
MI ■	
PE	
RD	
VDO ■	

12" DEEP

42"H • 3 Shelves

W2442 BUTT ■ ◆
W2742 BUTT ■ ◆
W3042 BUTT ■ ◆
W3342 BUTT ■ ◆
W3642 BUTT ■ ◆
W2442 BUTT SD ◆
W2742 BUTT SD ◆
W3042 BUTT SD ◆
W3342 BUTT SD ◆
W3642 BUTT SD ◆

39"H • 3 Shelves

*W2439 BUTT ■ ◆
*W2739 BUTT ■ ◆
*W3039 BUTT ■ ◆
*W3339 BUTT ■ ◆
*W3639 BUTT ■ ◆
*W2439 BUTT SD ◆
*W2739 BUTT SD ◆
*W3039 BUTT SD ◆
*W3339 BUTT SD ◆
*W3639 BUTT SD ◆

**N/A for Value Built*

36"H • 2 Shelves

W2436 BUTT ■ ◆
W2736 BUTT ■ ◆
W3036 BUTT ■ ◆
W3336 BUTT ■ ◆
W3636 BUTT ■ ◆
W2436 BUTT SD ◆
W2736 BUTT SD ◆
W3036 BUTT SD ◆
W3336 BUTT SD ◆
W3636 BUTT SD ◆

30"H • 2 Shelves

W2430 BUTT ■ ◆
W2730 BUTT ■ ◆
W3030 BUTT ■ ◆
W3330 BUTT ■ ◆
W3630 BUTT ■ ◆
W2430 BUTT SD ◆
W2730 BUTT SD ◆
W3030 BUTT SD ◆
W3330 BUTT SD ◆
W3630 BUTT SD ◆

27"H • 1 Shelf

W3027 BUTT ■ ◆
*W3027 BUTT SD ◆

**N/A for Value Built*

24"H • 1 Shelf

W2424 BUTT ■ ◆
W2724 BUTT ■ ◆
W3024 BUTT ■ ◆
W3324 BUTT ■ ◆
W3624 BUTT ■ ◆
W2424 BUTT SD ◆
W2724 BUTT SD ◆
W3024 BUTT SD ◆
W3324 BUTT SD ◆
W3624 BUTT SD ◆

21"H • No Shelf

W3021 BUTT ■ ◆
W3321 BUTT ■ ◆
W3621 BUTT ■ ◆
*W3021 BUTT SD ◆
*W3321 BUTT SD ◆
*W3621 BUTT SD ◆

**N/A for Value Built*

18"H • No Shelf

W2418 BUTT ■ ◆
W2718 BUTT ■ ◆
W3018 BUTT ■ ◆
W3318 BUTT ■ ◆
W3618 BUTT ■ ◆
W2418 BUTT SD ◆
W2718 BUTT SD ◆
W3018 BUTT SD ◆
W3318 BUTT SD ◆
W3618 BUTT SD ◆

15"H • No Shelf

W2415 BUTT ■ ◆
W2715 BUTT ■ ◆
W3015 BUTT ■ ◆
W3315 BUTT ■ ◆
W3615 BUTT ■ ◆
W2415 BUTT SD ◆
W2715 BUTT SD ◆
W3015 BUTT SD ◆
W3315 BUTT SD ◆
W3615 BUTT SD ◆

12"H • No Shelf

W2412 BUTT ■ ◆
W2712 BUTT ■ ◆
W3012 BUTT ■ ◆
W3312 BUTT ■ ◆
W3612 BUTT ■ ◆
W2412 BUTT SD ◆
W2712 BUTT SD ◆
W3012 BUTT SD ◆
*W3312 BUTT SD ◆
W3612 BUTT SD ◆

**N/A for Value Built*

24" DEEP

27"H • 1 Shelf

W3027 X 24 DP BUTT ■
*W3027 X 24 DP BUTT SD

**N/A for Value Built*

24"H • 1 Shelf

W3024 X 24 DP BUTT ■
W3324 X 24 DP BUTT ■
W3624 X 24 DP BUTT ■
W3724 X 24 DP BUTT ■
W3024 X 24 DP BUTT SD
W3324 X 24 DP BUTT SD
W3624 X 24 DP BUTT SD
W3724 X 24 DP BUTT SD

21"H • No Shelf

W3021 X 24 DP BUTT ■
W3321 X 24 DP BUTT ■
W3621 X 24 DP BUTT ■
W3721 X 24 DP BUTT ■
*W3021 X 24 DP BUTT SD
*W3321 X 24 DP BUTT SD
*W3621 X 24 DP BUTT SD
W3721 X 24 DP BUTT SD

**N/A for Value Built*

18"H • No Shelf

W3018 X 24 DP BUTT ■
W3318 X 24 DP BUTT ■
W3618 X 24 DP BUTT ■
W3718 X 24 DP BUTT ■
W3018 X 24 DP BUTT SD
W3318 X 24 DP BUTT SD
W3618 X 24 DP BUTT SD
W3718 X 24 DP BUTT SD

15"H • No Shelf

W3015 X 24 DP BUTT ■
W3315 X 24 DP BUTT ■
W3615 X 24 DP BUTT ■
W3715 X 24 DP BUTT ■
W3015 X 24 DP BUTT SD
W3315 X 24 DP BUTT SD
W3615 X 24 DP BUTT SD
W3715 X 24 DP BUTT SD

12"H • No Shelf

W3012 X 24 DP BUTT ■
W3312 X 24 DP BUTT ■
W3612 X 24 DP BUTT ■
W3712 X 24 DP BUTT ■
W3012 X 24 DP BUTT SD
*W3312 X 24 DP BUTT SD
W3612 X 24 DP BUTT SD
W3712 X 24 DP BUTT SD

**N/A for Value Built*

Wall Cabinets

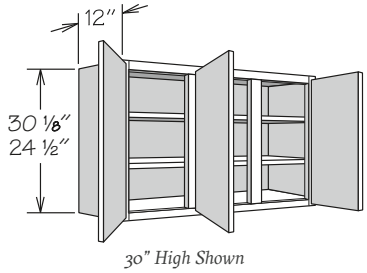

30" High Shown

- Specialty Door cabinets (SD) feature Matching Interior standard and require a specialty door selection
- Hinged as shown
- Center shelf support provided

PORTFOLIO SELECT & POTFOLIO	VALUE BUILT
APC	CFO
CCH	MI ■
CFO	RD
FE	VDO ■
MI ■	
PE	
RD	
VDO ■	

12" DEEP

30"H • 2 Shelves

W4530 ■
W4530 SD

24"H • 1 Shelf

W4524 ■
W4524 SD

Wall Cabinets · 4 Butt Doors

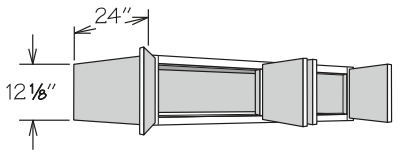

- Not drilled for adjustable shelf
- 24" deep cabinets must be installed by:
  - » Securely attaching to studs in back wall and both sides or to studs in back wall, one side and top (e.g. two adjacent cabinets or one adjacent cabinet and a wall)
  - » And must be either stacked, floor mounted or installed over a refrigerator

PORTFOLIO SELECT & POTFOLIO	VALUE BUILT
APC	CFO
CCH	MI
CFO	RD
FE	VDO
MI	
PE	
RD	
VDO	

24" DEEP

12"H ▪ No Shelf
W4812 X 24 DP BUTT

Wall Cabinet with Spice Rack · 1 Door

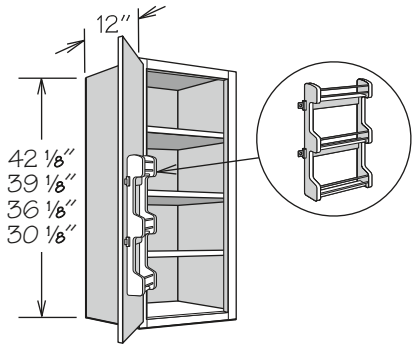

42" High Shown

- Cabinets indicated with an asterisk (*) are available for Portfolio Select and Portfolio Series only
- Spice Rack Kit packaged separately for field installation
- Position adjustable shelves prior to installation
- Kit in natural finish solid wood features chrome rails and three fixed shelves
- Must be ordered as hinged left or right
- CCH option is available on Portfolio Series only

PORTFOLIO SELECT & POTFOLIO	VALUE BUILT
APC	ID
CCH	MI
FE	
ID	
MI	
PE	

12" DEEP

42"H ▪ 3 Shelves
W1542 SR
W1842 SR
W2142 SR

39"H ▪ 3 Shelves
*W1539 SR
*W1839 SR
*W2139 SR
N/A for Value Built

36"H ▪ 2 Shelves
W1536 SR
W1836 SR
W2136 SR

30"H ▪ 2 Shelves
W1530 SR
W1830 SR
W2130 SR

Wall Top Hinge · 1 Door

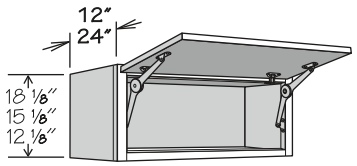

15" High Shown

- Features one pair of factory installed, field adjustable lid stays that supports door securely at any angle up to 105°
- Cabinet can be flipped to open downwards and lid stay can be adjusted to support door
- Door rail and stile configuration and insert panel grain direction will differ from standard wall cabinets,
- Specialty Door cabinets (SD) feature Matching Interior standard and require a specialty door selection
- MFD not available on Wall Top Hinge Specialty Door cabinets
- 24" deep cabinets must be installed by:
  - » Securely attaching to studs in back wall and both sides or to studs in back wall, one side and top (e.g. two adjacent cabinets or one adjacent cabinet and a wall)
  - » And must be either stacked, floor mounted or installed over a refrigerator

PORTFOLIO SELECT & POTFOLIO	VALUE BUILT
APC	ID ◆
FE	MI ■
ID ◆	RD
MI ■	VDO ■
PE	
RD	
VDO ■	

12" DEEP

18"H ▪ No Shelf
WTH3018 ■ ◆
WTH3618 ■ ◆
WTH3018 SD ◆
WTH3618 SD ◆

15"H ▪ No Shelf
WTH3015 ■ ◆
WTH3615 ■ ◆
WTH3015 SD ◆
WTH3615 SD ◆

12"H ▪ No Shelf
WTH4212 ■
WTH4212 SD

24" DEEP

18"H ▪ No Shelf
WTH3018 X 24 DP ■
WTH3618 X 24 DP ■
WTH3018 X 24 DP SD
WTH3618 X 24 DP SD

15"H ▪ No Shelf
WTH3015 X 24 DP ■
WTH3615 X 24 DP ■
WTH3015 X 24 DP SD
WTH3615 X 24 DP SD

Wall Microwave Cabinets · 2 Butt Doors

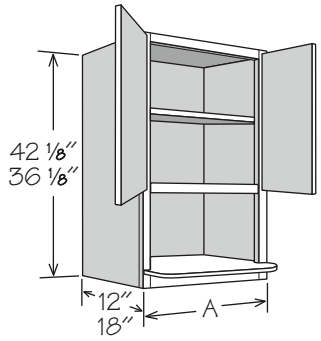

42" High Shown

- Cabinets indicated with an asterisk (*) are not available for Fairfield door style
- Must be installed between two adjacent cabinets or a cabinet and a wall
- Cabinet interior and microwave shelf are finished to match cabinet box exterior
- ¾" plywood microwave shelf included
- Designed to accommodate countertop style microwave
- Refer to appliance manufacturer's specifications for adequate clearances
- 36" high wall cabinets are not drilled for adjustable shelf
- CCH option is available on Portfolio Series only

PORTFOLIO SELECT & POTFOLIO	VALUE BUILT
APC	RD
CCH	VDO
FE	
PE	
RD	
VDO	

		LOWER FRAME OPENING		
12" DEEP	**A**	**WIDTH**	**HEIGHT**	**DEPTH**
36"H • No Shelf				
*WMSC271236 BUTT	27"	23 ¾"	18 5/8"	17¾"
WMSC301236 BUTT	30"	26¾"	18 5/8"	17¾"
WCMSC241236 BUTT	24"	20¾"	15 5/8"	17¾"
WCMSC271236 BUTT	27"	23¾"	15 5/8"	17¾"
*N/A for Fairfield				
18" DEEP				
42"H • 1 Shelf				
WMSC271842 BUTT	27"	23 ¾"	15¼"	23¾"
36"H • No Shelf				
*WMSC271836 BUTT	27"	23 ¾"	18 5/8"	23¾"
*N/A for Fairfield				

Microwave Wall Cabinets · 2 Butt Doors

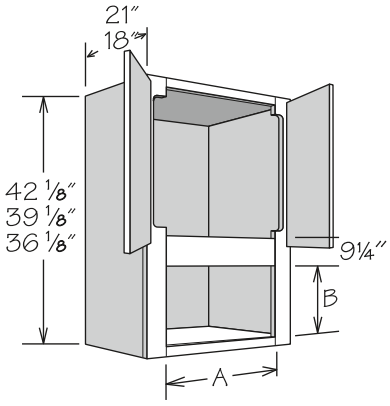

42" High Shown

- Cabinets indicated with an asterisk (*) are available for Portfolio Select and Portfolio Series only
- Must be installed between two cabinets or a cabinet and a wall
- Designed to accommodate microwaves with trim kit
- A cutout exists in the door area where the 3⅛" stiles are routed to 1⅝"
- Refer to appliance manufacturers specifications for adequate clearances
- Not drilled for adjustable shelf
- CCH option is available on Portfolio Series only

PORTFOLIO SELECT & POTFOLIO	VALUE BUILT
APC	ID
CCH	MI
FE	RD
ID	
MI	
PE	
RD	

18" DEEP	**A ACTUAL**	**A MAX.**	**B ACTUAL**	**B MAX. (FOL)**	**B MAX. (SOL)**
42"H • No Shelf					
WMC301842 BUTT	23¾"	28"	12¼"	19½"	20"
39"H • No Shelf					
*WMC301839 BUTT	23¾"	28"	11¾"	19½"	20"
36"H • No Shelf					
WMC301836 BUTT	23¾"	28"	11¾"	19½"	20"
*N/A for Value Built					
21" DEEP					
42"H • No Shelf					
WMC302142 BUTT	23¾"	28"	12¼"	19½"	20"
39"H • No Shelf					
*WMC302139 BUTT	23¾"	28"	11¾"	19½"	20"
*N/A for Value Built					
36"H • No Shelf					
WMC302136 BUTT	23¾"	28"	11¾"	19½"	20"

Blind Wall Cabinet · 1 Door

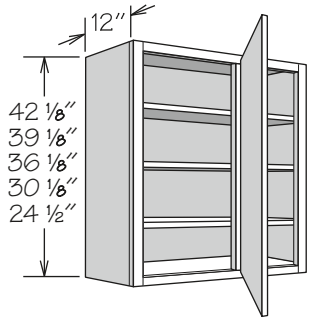

42" High Shown

- Cabinets indicated with an asterisk (*) are available for Portfolio Select and Portfolio Series only
- Cabinet shown as right indicating blind opening is on the right side of cabinet (must be ordered as left or right)
- Includes 1/8" panel to cover blind opening (field trim and install)
- Refer to Blind Wall Cabinet Installation Chart for specifications
- Must order Universal Filler separately
- Specialty Door cabinets (SD) feature Matching Interior standard and require a specialty door selection
- CCH option is available on Portfolio Series only

PORTFOLIO SELECT & POTFOLIO	VALUE BUILT
APC	CFO
CCH	ID
CFO	MI ■
FE	RD
ID	VDO ■
MI ■	
PE	
RD	
VDO ■	

12" DEEP

42"H • 3 Shelves
BLW24/2742 ■
BLW30/3342 ■
BLW33/3642 ■
BLW24/2742 SD
BLW30/3342 SD
BLW33/3642 SD

39"H • 3 Shelves
*BLW24/2739 ■
*BLW30/3339 ■
*BLW33/3639 ■
*BLW24/2739 SD
*BLW30/3339 SD
*BLW33/3639 SD
*N/A for Value Built

36"H • 2 Shelves
BLW24/2736 ■
BLW30/3336 ■
BLW33/3636 ■
BLW24/2736 SD
BLW30/3336 SD
BLW33/3636 SD

30"H • 2 Shelves
BLW24/2730 ■
BLW27/3030 ■
BLW30/3330 ■
BLW33/3630 ■
BLW36/3930 ■
BLW24/2730 SD
BLW27/3030 SD
BLW30/3330 SD
BLW33/3630 SD

24"H • 1 Shelf
BLW24/2724 ■
BLW27/3024 ■
BLW30/3324 ■
BLW33/3624 ■
BLW24/2724 SD
BLW27/3024 SD
BLW30/3324 SD
BLW33/3624 SD

Blind Wall Cabinet · 2 Butt Doors

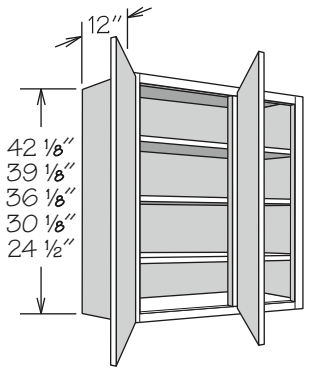

42" High Shown

- Cabinets indicated with an asterisk (*) are available for Portfolio Select and Portfolio Series only
- Cabinet shown as right indicating blind opening is on the right side of cabinet (can be reversed in the field)
- Includes 1/8" panel to cover blind opening (field trim and install)
- Refer to Blind Wall Cabinet Installation Chart for specifications
- Must order Universal Filler separately
- Specialty Door cabinets (SD) feature Matching Interior standard and require a specialty door selection
- Center shelf support provided on cabinets 39" or wider
- CCH option is available on Portfolio Series only

PORTFOLIO SELECT & POTFOLIO	VALUE BUILT
APC	CFO
CCH	ID ◆
CFO	MI ■
FE	RD
ID ◆	VDO ■
MI ■	
PE	
RD	
VDO ■	

12" DEEP

42"H • 3 Shelves
BLW36/3942 BUTT ■ ◆
BLW39/4242 BUTT ■
BLW42/4542 BUTT ■
BLW36/3942 BUTT SD ◆
BLW39/4242 BUTT SD
BLW42/4542 BUTT SD

39"H • 3 Shelves
*BLW36/3939 BUTT ■ ◆
*BLW39/4239 BUTT ■
*BLW42/4539 BUTT ■
*BLW36/3939 BUTT SD ◆
*BLW39/4239 BUTT SD
*BLW42/4539 BUTT SD
*N/A for Value Built

36"H • 2 Shelves
BLW36/3936 BUTT ■ ◆
BLW39/4236 BUTT ■
BLW42/4536 BUTT ■
BLW36/3936 BUTT SD ◆
BLW39/4236 BUTT SD
BLW42/4536 BUTT SD

30"H • 2 Shelves
BLW36/3930 BUTT ■ ◆
BLW39/4230 BUTT ■
BLW42/4530 BUTT ■
BLW45/4830 BUTT ■
BLW48/5130 BUTT ■
BLW36/3930 BUTT SD ◆
BLW39/4230 BUTT SD
BLW42/4530 BUTT SD
BLW45/4830 BUTT SD
BLW48/5130 BUTT SD

24"H • 1 Shelf
BLW36/3924 BUTT ■ ◆
BLW36/3924 BUTT SD ◆

Blind Wall Cabinet Installation Chart

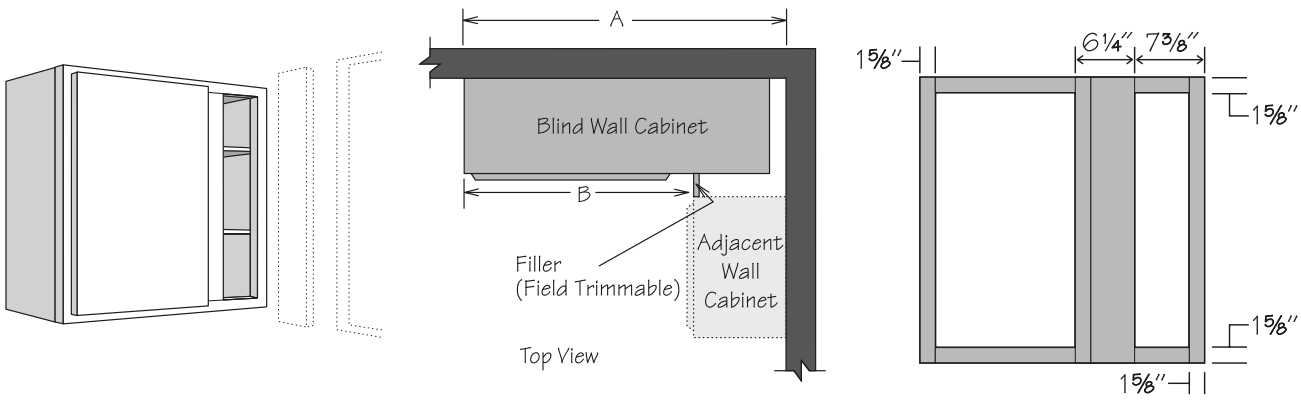

Full Overlay Door Styles

Full Overlay door styles require decorative hardware, which has been calculated into dimensions.

CABINET	ACTUAL CABINET WIDTH	DOOR OPENING	DOOR(S)	WALL SPACE A			EXPOSED FRAME B	
				MINIMUM SPACE*	MAXIMUM PULL	MAXIMUM SPACE	MINIMUM SPACE*	MAXIMUM SPACE
BLW24/27_	24"	8¾"	DR12__	26¼"	1¾"	28"	14¼"	16"
BLW27/30_	27"	11¾"	DR15__	29¼"	1¾"	31"	17¼"	19"
BLW30/33_	30"	14¾"	DR18__	32¼"	1¾"	34"	20¼"	22"
BLW33/36_	33"	17¾"	DR21__	35¼"	1¾"	37"	23¼"	25"
BLW36/3930	36"	20¾"	DR2430	38¼"	1¾"	40"	26¼"	28"
BLW36/39_ BUTT	36"	20¾"	DR12__ BUTT (2)	38¼"	1¾"	40"	26¼"	28"
BLW39/42_ BUTT	39"	23¾"	DR13__ BUTT (2)	41¼"	1¾"	43"	29¼"	31"
BLW42/45_ BUTT	42"	26¾"	DR15__ BUTT (2)	44¼"	1¾"	46"	32¼"	34"
BLW45/48_ BUTT	45"	29¾"	DR16__ BUTT (2)	47¼"	1¾"	49"	35¼"	37"
BLW48/51_ BUTT	48"	32¾"	DR18__ BUTT (2)	50¼"	1¾"	52"	38¼"	40"

**Dimension requirements do not include optional Overlay Fillers – add ⅞" if Overlay Fillers will be used.*

Standard Overlay Door Styles

Wall Space A requirements include optional decorative hardware clearance. 1¼" may be deducted if decorative hardware is not used.

CABINET	ACTUAL CABINET WIDTH	DOOR OPENING	DOOR(S)	WALL SPACE A			EXPOSED FRAME B	
				MINIMUM SPACE	MAXIMUM PULL	MAXIMUM SPACE	MINIMUM SPACE	MAXIMUM SPACE
BLW24/27_	24"	8¾"	DR12__	25⅜"	2⅝"	28"	13⅜"	16"
BLW27/30_	27"	11¾"	DR15__	28⅜"	2⅝"	31"	16⅜"	19"
BLW30/33_	30"	14¾"	DR18__	31⅜"	2⅝"	34"	19⅜"	22"
BLW33/36_	33"	17¾"	DR21__	34⅜"	2⅝"	37"	22⅜"	25"
BLW36/3930	36"	20¾"	DR2430	37⅜"	2⅝"	40"	25⅜"	28"
BLW36/39_ BUTT	36"	20¾"	DR12__ BUTT (2)	37⅜"	2⅝"	40"	25⅜"	28"
BLW39/42_ BUTT	39"	23¾"	DR13__ BUTT (2)	40⅜"	2⅝"	43"	28⅜"	31"
BLW42/45_ BUTT	42"	26¾"	DR15__ BUTT (2)	43⅜"	2⅝"	46"	31⅜"	34"
BLW45/48_ BUTT	45"	29¾"	DR16__ BUTT (2)	46⅜"	2⅝"	49"	34⅜"	37"
BLW48/51_ BUTT	48"	32¾"	DR18__ BUTT (2)	49⅜"	2⅝"	52"	37⅜"	40"

Corner Wall Cabinets

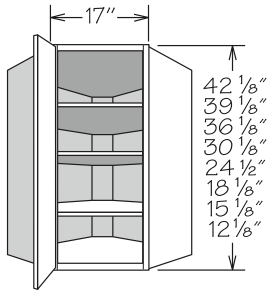

42" High Shown

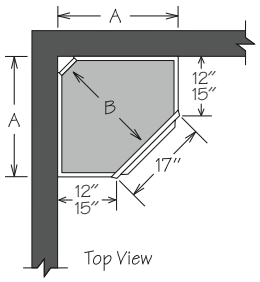

PORTFOLIO SELECT & POTFOLIO

APC
CCH
FE
MI ■
PE
VDO ■

VALUE BUILT

MI ■
VDO ■

- Cabinets indicated with an asterisk (*) are available for Portfolio Select and Portfolio Series only
- Must be ordered as hinged left or right
- Door opening is 11¾" wide
- Features a DR15_ door
- Specialty Door cabinets (SD) feature Matching Interior standard and require a specialty door selection
- 24" high cabinet's shelf is adjustable, not removable
- Glass Shelf Kit is not available for 24", 18", 15" and 12" high cabinets
- CCH option is available on Portfolio Series only

	A	B
12" Deep	24"	21 ½"
15" Deep	27"	25 ¾"

12" DEEP

42"H • 3 Shelves
CW2442 ■
CW2442 SD

15"H • No Shelf
CW2415 ■
CW2415 SD

39"H • 3 Shelves
*CW2439 ■
*CW2439 SD
**N/A for Value Built*

12"H • No Shelf
CW2412 ■
CW2412 SD

36"H • 2 Shelves
CW2436 ■
CW2436 SD

30"H • 2 Shelves
CW2430 ■
CW2430 SD

24"H • 1 Shelf
CW2424 ■
CW2424 SD

18"H • No Shelf
CW2418 ■
CW2418 SD

15" DEEP

42"H • 3 Shelves
CW2742 ■
CW2742 SD

15"H • No Shelf
CW2715 ■
CW2715 SD

39"H • 3 Shelves
*CW2739 ■
*CW2739 SD
**N/A for Value Built*

12"H • No Shelf
CW2712 ■
CW2712 SD

36"H • 2 Shelves
CW2736 ■
CW2736 SD

30"H • 2 Shelves
CW2730 ■
CW2730 SD

24"H • 1 Shelf
CW2724 ■
CW2724 SD

18"H • No Shelf
CW2718 ■
CW2718 SD

Corner Wall Cabinets · Spin Units

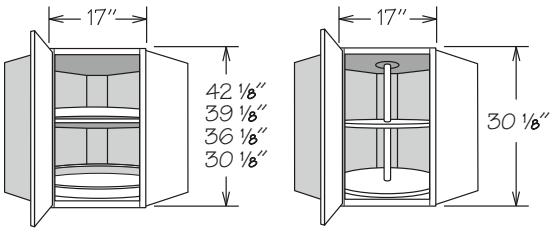

WOOD SPIN UNIT PLASTIC SPIN UNIT

30" High Shown

PORTFOLIO SELECT & POTFOLIO

APC
CCH
FE
MI ■
PE
VDO ■

VALUE BUILT

MI ■
VDO ■

- Cabinets indicated with an asterisk (*) are available for Portfolio Select and Portfolio Series only
- Must be ordered as hinged left or right
- Door opening is 11¾" wide
- Features a DR15_ door
- Wood Spin Units feature:
  - » One fixed spin unit mounted on cabinet floor and all other spin units are attached to ¾" adjustable shelf
  - » Natural wood finish with 1" lip
- Plastic Spin Units feature:
  - » Two spin shelves with pole (top shelf adjustable)
  - » White high strength plastic shelves
- Specialty Door cabinets (SD) feature Matching Interior standard and require a specialty door selection
- CCH option is available on Portfolio Series only

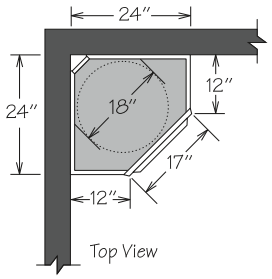

WOOD SPIN UNIT

42"H • 3 Spin Units
CWS2442 WD ■
CWS2442 WD SD

39"H • 3 Spin Units
*CWS2439 WD ■
*CWS2439 WD SD
**N/A for Value Built*

36"H • 2 Spin Units
CWS2436 WD ■
CWS2436 WD SD

30"H • 2 Spin Units
CWS2430 WD ■
CWS2430 WD SD

PLASTIC SPIN UNIT

30"H • 2 Spin Units
CWS2430 ■
CWS2430 SD

Wall Easy Reach

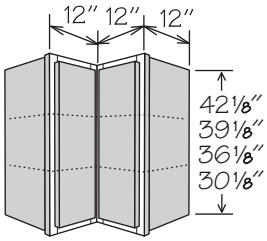

30" High Shown

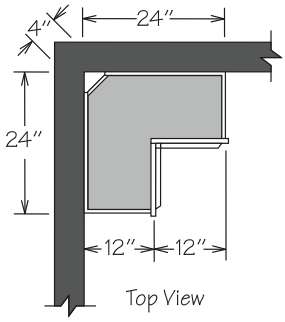

- Stile width and outside profile of both doors at door-to-door hinge may vary from standard dimension and profile for proper door function
- Cabinets indicated with an asterisk (*) are available for Portfolio Select and Portfolio Series only
- Must be ordered as hinged left or right
- Doors open 170°

PORTFOLIO SELECT & POTFOLIO	VALUE BUILT
APC	MI
FE	
MI	
PE	

12" DEEP

42"H • 3 Shelves
WER2442

39"H • 3 Shelves
*WER2439
**N/A for Value Built*

36"H • 2 Shelves
WER2436

30"H • 2 Shelves
WER2430

Wall End Angle · 1 Door

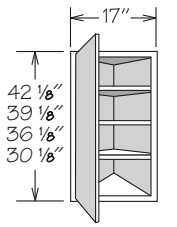

42" High Shown

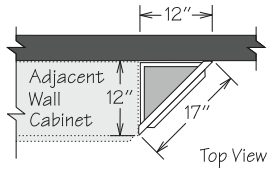

- Cabinets indicated with an asterisk (*) are available for Portfolio Select and Portfolio Series only
- Requires 12" x 12" space
- Features a DR15_ door
- Must be ordered as hinged left or right
- Specialty Door cabinets (SD) feature Matching Interior standard and require a specialty door selection
- CCH option is available on Portfolio Series only

PORTFOLIO SELECT & POTFOLIO	VALUE BUILT
APC	MI ■
CCH	VDO ■
MI ■	
PE	
VDO ■	

12" DEEP

42"H • 3 Shelves
WEA1242 ■
WEA1242 SD

39"H • 3 Shelves
*WEA1239 ■
*WEA1239 SD
**N/A for Value Built*

36"H • 2 Shelves
WEA1236 ■
WEA1236 SD

30"H • 2 Shelves
WEA1230 ■
WEA1230 SD

Storage Cube

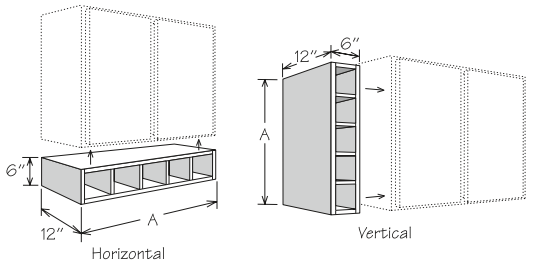

30" Shown

- Designed for horizontal or vertical installation
- Vertical installation may require the use of fillers and/or molding which must be ordered separately
- Opening size is 5" wide x 4½" high (horizontal) which will accommodate most wine bottles and various other storage needs
- All door styles feature ¾" veneered engineered wood finished to match cabinet box exterior
- Flush sides with no face frame or ¼" reveals
- Interior finished to match cabinet box exterior
- Cannot be retrofitted with Spice Drawer Cabinet drawers

12" DEEP	A	NUMBER OF OPENINGS
SC30	30"	5
SC36	36"	6
SC42	42"	7

Spice Drawer Cabinet

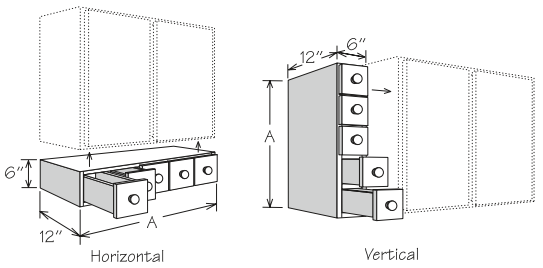

30" Shown

- Designed for horizontal or vertical installation
- Vertical installation may require the use of fillers and/or molding which must be ordered separately
- All door styles feature veneered engineered wood with ½" thick slab drawer fronts
- Flush sides with no face frame or ¼" reveals
- All wood drawer body with dovetail construction
- Linen, Pewter, and White door styles feature white porcelain knobs and all other finishes feature matching wooden knobs
- Duraform or Thermofoil door styles feature drawer fronts finished to match cabinet box exterior

12" DEEP	A	NUMBER OF DRAWERS
SDC18	18"	3
SDC24	24"	4
SDC30	30"	5
SDC36	36"	6

Construction Options (see page 42): ■ or ◆ = Available for selected SKUs

Wine Rack Cabinet

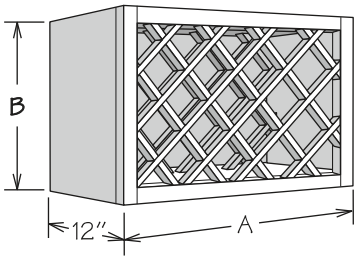

18" High Shown

- Features Matching Interior standard
- Interior finished to match cabinet box exterior
- Wine bottle opening is 4" x 4"
- Cabinets must be installed between two adjacent cabinets, one cabinet and a wall, or secured to a cabinet directly above or below

PORTFOLIO SELECT & POTFOLIO

APC
FE
PE

12" DEEP	A	B	NUMBER OF BOTTLES
18"H			
WRC3018	30"	18⅛"	11
15"H			
WRC3015	30"	15⅛"	10
WRC3615	36"	15⅛"	13

Wine Storage Cabinet

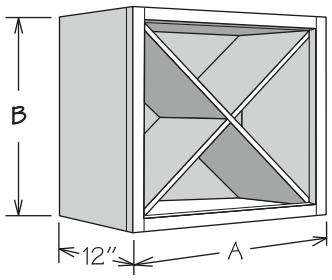

- Features Matching Interior standard
- Interior finished to match cabinet box exterior
- Standard cabinet sides are ½" engineered wood
- All door styles feature ¾" plywood partitions
- Accent molding recommended – order separately
- Cabinets must be installed between two adjacent cabinets, one cabinet and a wall, or secured to a cabinet directly above or below

PORTFOLIO SELECT & POTFOLIO

APC
FE
PE

12" DEEP	A	B	NUMBER OF BOTTLES
24"H			
WSC2424	24"	24½"	30
18"H			
WSC1818	18"	18⅛"	12

Shelf End Wall

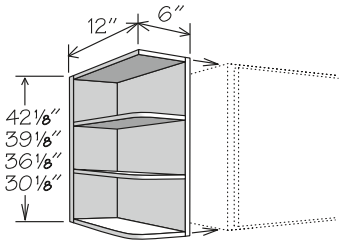

SQUARE TOP, ROUND BOTTOM (SQT)

30" High Shown

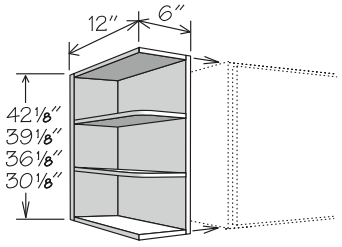

SQUARE TOP & BOTTOM (SQTB)

30" High Shown

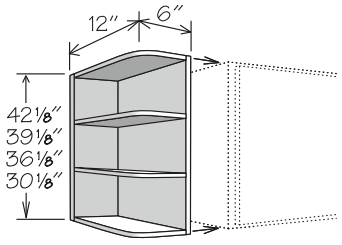

ROUND TOP & BOTTOM (SEW)

30" High Shown

- Cabinets indicated with an asterisk (*) are available for Portfolio Select and Portfolio Series only
- Interior finished to match cabinet box exterior
- Features ½" veneered engineered wood back and side
- Top, bottom, and shelves are ¾" veneered engineered wood
- Rounded shelves feature a 3" radius
- 1⅛" screw recommended from inside of adjacent cabinet for installation
- Rounded bottom on SEW_ SQT does not allow cabinet to be reversed in the field or installation of bottom molding

12" DEEP

42"H ▪ 3 Shelves

SEW42L SQT
SEW42R SQT
SEW42 SQTB
SEW42

39"H ▪ 3 Shelves

*SEW39L SQT
*SEW39R SQT
*SEW39 SQTB
*SEW39

**N/A for Value Built*

36"H ▪ 2 Shelves

SEW36L SQT
SEW36R SQT
SEW36 SQTB
SEW36

30"H ▪ 2 Shelves

SEW30L SQT
SEW30R SQT
SEW30 SQTB
SEW30

Straight Appliance Garage

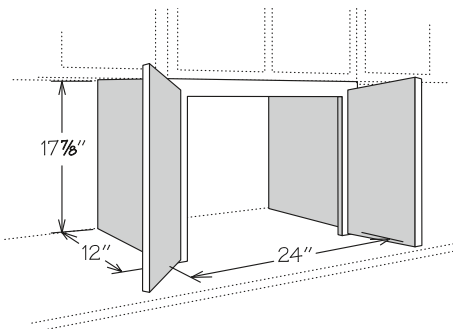

- Cabinets indicated with an asterisk (*) are available for Portfolio Select and Portfolio Series only
- Installs below minimum 24" wide wall cabinet
- 20¾" wide x 15⁵⁄₁₆" high opening
- Shipped with end panels unattached
- No bottom rail
- CCH option is available on Portfolio Series only

PORTFOLIO SELECT & POTFOLIO

APC
CCH
FE
ID
MI ■
PE
RD
VDO ■

12" DEEP

*AGSD24 BUTT ■

*AGSD24 BUTT SD

**N/A for Value Built*

Corner Appliance Garage

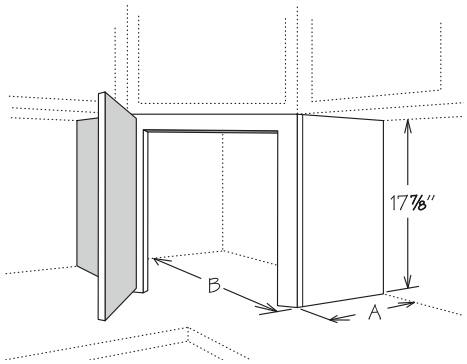

- Cabinets indicated with an asterisk (*) are available for Portfolio Select and Portfolio Series only
- Installs below CW and CWS Corner Wall cabinets
- 11¾" wide x 15⁵⁄₁₆" high opening
- Shipped with end panels unattached
- No bottom rail
- CCH option is available on Portfolio Series only

PORTFOLIO SELECT & POTFOLIO

APC
CCH
FE
MI ■
PE
VDO ■

12" DEEP	A	B
*AGD2418 ■	12"	24"
*AGD2418 SD	12"	24"

**N/A for Value Built*

15" DEEP	A	B
*AGD2718 ■	15"	27"
*AGD2718 SD	15"	27"

**N/A for Value Built*

Wall Range Hood

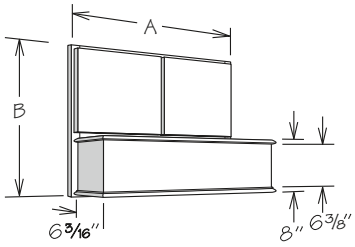

STRAIGHT VALANCE __SV

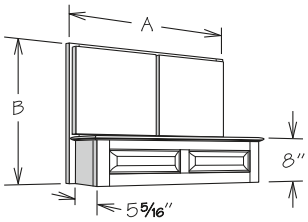

RAISED PANEL __RP

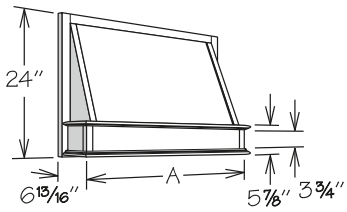

CLASSIC TAPERED __CT

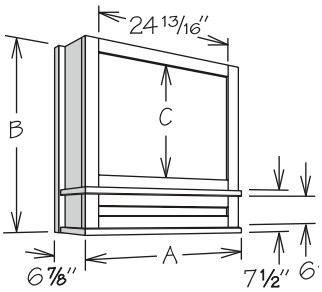

DECORATIVE MANTLE ▪ 1 PANEL

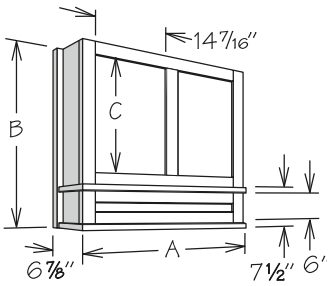

DECORATIVE MANTLE ▪ 2 PANEL

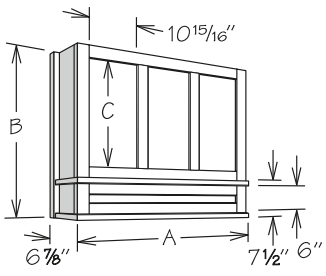

DECORATIVE MANTLE ▪ 3 PANEL

- Must be installed between two wall cabinets
- Silver metallic liner included
- Order range hood blower separately – not for use with RHVENT 960
- All finished surfaces will match cabinet box exterior - glazed finishes will be glazed
- Straight Valance and Raised Panel Range Hoods feature:
  - » Center stile and functioning BUTT doors allow for duct work installation and wiring
  - » Doors will match door style ordered
  - » For Duraform door styles, only the doors will be wrapped

	A	B	C	DOORS
Straight Valance				
WRH3024 SV	30"	24"	—	(2) DR1515 BUTT
WRH3624 SV	36"	24"	—	(2) DR1815 BUTT
WRH3027 SV	30"	27"	—	(2) DR1518 BUTT
WRH3627 SV	36"	27"	—	(2) DR1818 BUTT
WRH3030 SV	30"	30"	—	(2) DR1521 BUTT
WRH3630 SV	36"	30"	—	(2) DR1821 BUTT
Raised Panel				
WRH3024 RP	30"	24"	—	(2) DR1515 BUTT
WRH3624 RP	36"	24"	—	(2) DR1815 BUTT
WRH3027 RP	30"	27"	—	(2) DR1518 BUTT
WRH3627 RP	36"	27"	—	(2) DR1818 BUTT
WRH3030 RP	30"	30"	—	(2) DR1521 BUTT
WRH3630 RP	36"	30"	—	(2) DR1821 BUTT
Classic Tapered				
WRH3024 CT	30"	—	—	—
WRH3624 CT	36"	—	—	—
Decorative Mantle ▪ 1 Panel				
WRH3024 DM	30"	24"	12 5/16"	—
WRH3030 DM	30"	30"	18 5/16"	—
WRH3036 DM	30"	36"	24 5/16"	—
Decorative Mantle ▪ 2 Panel				
WRH3624 DM	36"	24"	12 5/16"	—
WRH3630 DM	36"	30"	18 5/16"	—
WRH3636 DM	36"	36"	24 5/16"	—
Decorative Mantle ▪ 3 Panel				
WRH4236 DM	42"	36"	24 5/16"	—

Range Hood · Integrated Chimney

NEW! NOMENCLATURE **NEW!** UPDATE

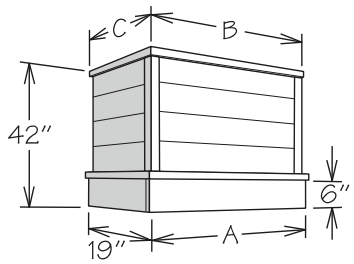

SHIPLAP BOX __SB

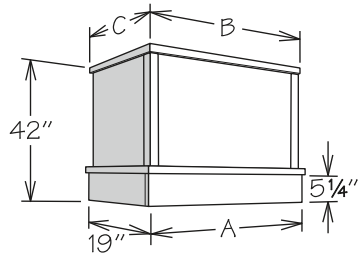

MODERN BOX __MB

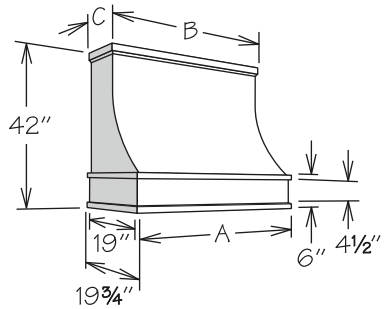

SLOPED __SLWM

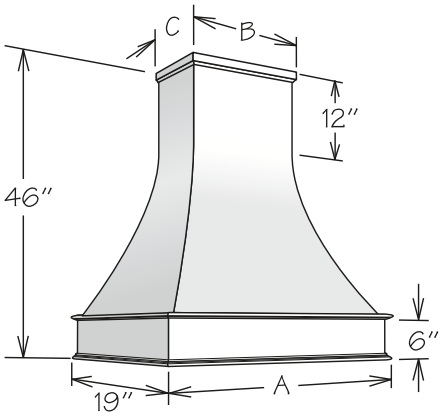

ARTISAN __AWM

- **UPDATE:** Artisan and Sloped range hoods now include a piece of Contemporary Trim Molding (CLTM8) to field trim and install at the top of hood
- All door styles are finished to match cabinet box exterior - glazed finishes will be glazed
- Wall mounted installation only
- Silver metallic liner included – liner specific to range hood and blower ordered
  - » If no blower is ordered, RHLINER_S will be included
- Order range hood blower separately
- Field trimmable in height to 24"
- RH_ SB and RH_ MB include field installed corner molding and removable top molding
- Features a french cleat install system which requires 1" gap between hood and ceiling - use included molding to cover the gap

	A	B*	C**
Shiplap Box			
RH3642 SB	36"	37½"	19¾"
RH4242 SB	42"	43½"	19¾"
RH4842 SB	48"	49½"	19¾"
Modern Box			
RH3642 MB	36"	37½"	19¾"
RH4242 MB	42"	43½"	19¾"
RH4842 MB	48"	49½"	19¾"
Sloped			
RH3642 SLWM	37 9/16"	36"	10⅞"
RH4242 SLWM	43 9/16"	42"	10⅞"
Artisan			
RH3646 AWM	38 5/16"	18½"	10¼"
RH4246 AWM	44 5/16"	24½"	10¼"

**Includes ¾" thick molding installed on both sides of hood - subtract 1 ½" for dimension without molding*
***Includes ¾" thick molding installed on front of hood - subtract ¾" for dimension without molding*

Range Hood

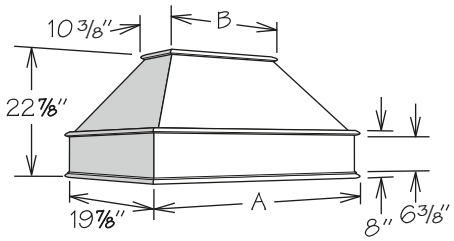

STRAIGHT VALANCE __SV

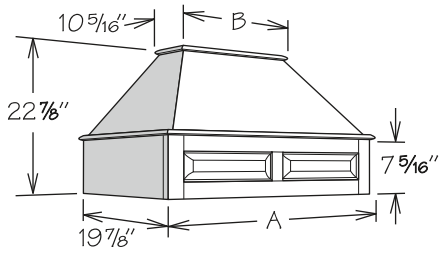

RAISED PANEL __RP

- All door styles are finished to match cabinet box exterior - glazed finishes will be glazed
- Wall mounted installation only
- Order range hood blower separately
- Silver metallic liner included - liner is specific to range hood and blower ordered
  - » If no blower is ordered RHLINER_S will be included
- May be accessorized with Range Hood Chimney - order separately

	A	B
Straight Valance		
RH3624 SV	37 3/4"	18 3/4"
RH4224 SV	43 3/4"	24 3/4"
RH4824 SV	49 3/4"	30 3/4"
Raised Panel		
RH3624 RP	37 3/4"	18 9/16"
RH4224 RP	43 3/4"	24 9/16"
RH4824 RP	49 3/4"	30 9/16"

Range Hood Chimney

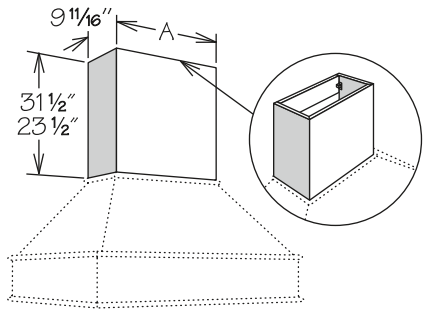

- Field trimmable in height
- All door styles feature ¾" solid wood finished to match cabinet box exterior
- Features two chimney mounting blocks with metal fasteners
- For use with Straight Valance or Raised Panel Range Hoods

23½" HIGH	31½" HIGH	A
RHC3623	RHC3631	17 3/8"
RHC4223	RHC4231	23 3/8"
RHC4823	RHC4831	29 3/8"

Plain Box Filler

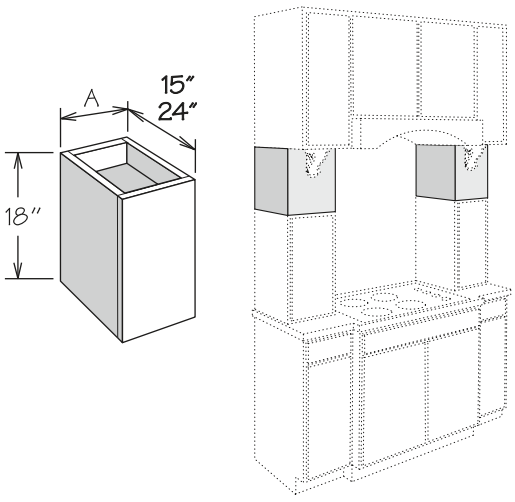

- Veneered engineered wood
- Features ¼" reveal
- Trimmable in height to 14⅛" tall
- Reversible for left or right installation

24" DEEP	15" DEEP	A
WPB91824	WPB91815	9"
WPB121824	WPB121815	12"

Range Hood Blower · 260 CFM Recirculating

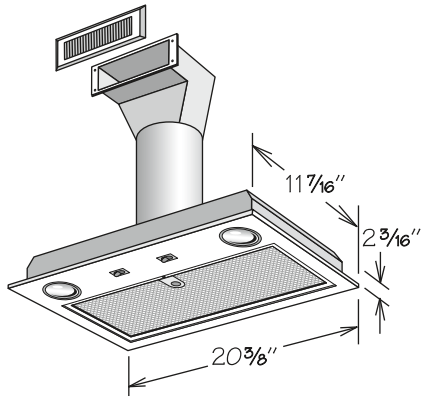

- Designed for recirculating installation where exhaust is vented back into kitchen
- Includes duct work, metal grille and clips – field assembly required
- Stainless steel finish
- 2-Speed fan provides 260 CFM on high
- Sound level of 7.0 sones on high
- Features quick-release dishwasher safe aluminum mesh filter
- Includes two 2.8W bright LED lights
- Metal grille measures 11¼" x 5 5/16"
- 10" x 3" cutout required for metal grille
- Installation and care instructions included
- Liner not included

RHVENT 260R

Range Hood Blower · 400 CFM Recirculating

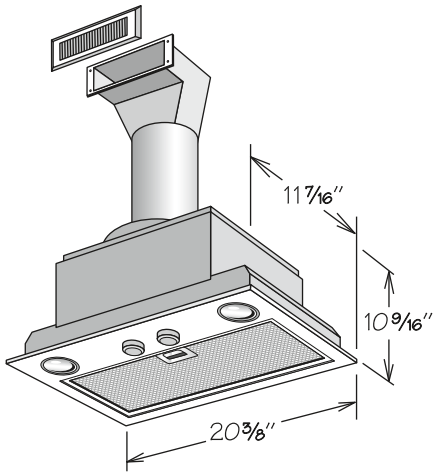

- Designed for recirculating installation where exhaust is vented back into kitchen
- Includes duct work, metal grille and clips – field assembly required
- Stainless steel finish
- Energy Star rated
- Features 3-speed rotary switch
- Fan provides 400 CFM on high
- Sound level of 6.0 sones on high
- Features quick-release dishwasher safe aluminum mesh filter
- Includes two 2.8W bright LED lights
- Unit has master on-off switch and heat sentry will automatically turn unit on when excessive heat is detected
- Metal grille measures 11¼" x 5 5/16"
- 10" x 3" cutout required for metal grille
- Installation and care instructions included
- Liner not included

RHVENT 400R

Range Hood Blower · 260 CFM Vented

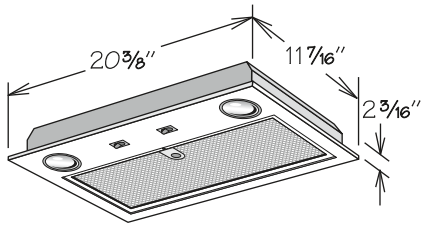

- Designed for vented installation where exhaust is vented to exterior of home
- Stainless steel finish
- Requires 7" round duct for venting to exterior (not included)
- 2-Speed fan provides 260 CFM on high
- Sound level of 7.0 sones on high
- Features quick-release dishwasher safe aluminum mesh filter
- Includes two 2.8W bright LED lights
- Installation and care instructions included
- Liner not included

RHVENT 260

Range Hood Blower · 400 CFM Vented

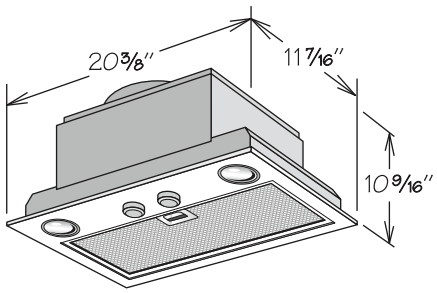

- Designed for vented installation where exhaust is vented to exterior of home
- Stainless steel finish
- Energy Star rated
- Features 3-speed rotary switch
- Requires vertical 6" round or rectangular 3¼" x 10" duct for venting (not included)
- Fan provides 400 CFM on high using the rectangular duct and 390 CFM using the round duct
- Sound level of 6.0 sones on high
- Features quick-release dishwasher safe aluminum mesh filter
- Includes two 2.8W bright LED lights
- Unit has master on-off switch and heat sentry will automatically turn unit on when excessive heat is detected
- Installation and care instructions included
- Liner not included

RHVENT 400

Range Hood Blower · 600 CFM Vented

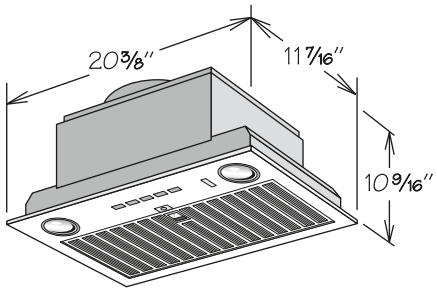

- Designed for vented installation where exhaust is vented to exterior of home
- Stainless steel finish
- Features 4-speed back-lit Electronic Soft Touch controls
- Fan provides 600 CFM using the round duct and 580 CFM on high using the rectangular duct
- Sound level of 9.5 sones on high
- Features quick-release dishwasher safe baffle-style filter with clean filter reminder
- Includes two 3W bright LED lights with 3 lighting levels
- Unit has master on-off switch and heat sentry will automatically turn unit on when excessive heat is detected
- Auto-Sensing option sets CFM to correct level automatically
- Wifi enabled option allows for voice control
- Requires 8" round, 6" round, or 3¼" x 10" venting to exterior (not included)
- Installation and care instructions included
- Liner not included

RHVENT 600

Range Hood Blower · 960 CFM Vented

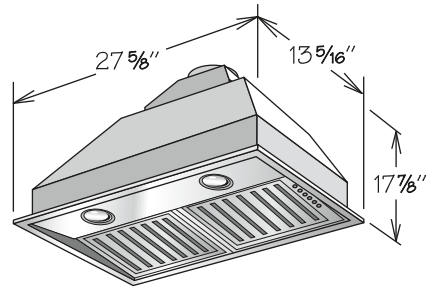

- Designed for vented installation where exhaust is vented to exterior of home
- Durable stainless steel with brushed finish
- Features a 4-speed push-button control to offer greater CFM flexibility; 960 CFM, 660 CFM, 480 CFM and 300 CFM
- Centrifugal blower provides 960 CFM air delivery and sound level of 5.1 sones on high
- Includes two 4-watt 12v MR16 LED bulbs - daylight
- Features quick-release dishwasher safe baffle-style filter
- 10 minute delay off timer
- Requires 7" round duct for venting to exterior (not included)
- Installation and care instructions included
- Not designed for use with the following:
  - » Straight Valance Wall Range Hoods
  - » Raised Panel Wall Range Hoods
  - » Classic Tapered Wall Range Hoods
  - » Decorative Mantle Wall Range Hoods
- Liner not included

RHVENT 960

Tapered Hood Liner

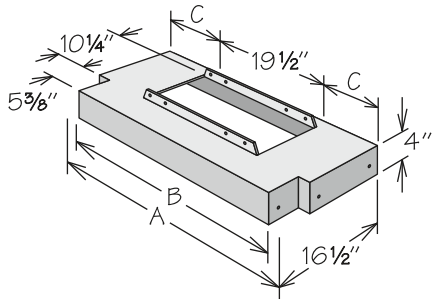

- Liner is silver metallic powder coated metal
- For use with the following Wall Range Hoods:
  - » Straight Valance (WRH_ SV)
  - » Raised Panel (WRH_ RP)
  - » Classic Tapered (WRH_ CT)
  - » Decorative Mantle (WRH_ DM)
- One liner included with range hood

	A	B	C
RHLINER 30	29 15/16"	26 3/16"	5 7/32"
RHLINER 36	35 15/16"	32 3/16"	8 7/32"
RHLINER 42	41 15/16"	38 11/16"	11 7/32"

Straight Valance Hood Liner

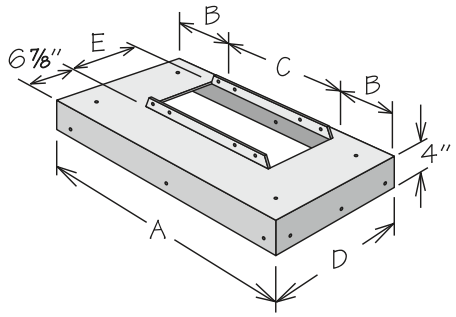

- Liner finish is silver metallic powder-coated material
- For use with the following Range Hoods:
  - » Straight Valance (RH_ SV)
  - » Raised Panel (RH_ RP)
  - » Modern Box (RH_ MB)
  - » Shiplap Box (RH_ SB)
  - » Sloped (RH_ SLWM)
  - » Artisan (RH_ AWM)
- RHLINER _S SL1 must be used with RHVENT 960 blower
- RHLINER _S for use with all blowers except RHVENT 960
- One liner included with range hood (liner is specific to range hood and blower ordered)

	A	B	C	D	E
RHLINER 36S	34 11/32"	7 7/16"	19½"	18 ¼"	10 ¼"
RHLINER 42S	40 11/32"	10 7/16"	19½"	18 ¼"	10 ¼"
RHLINER 48S	46 11/32"	13 7/16"	19½"	18 ¼"	10 ¼"
RHLINER 36S SL1	34 11/32"	3 3/4"	26 13/16"	18 3/16"	12 7/16"
RHLINER 42S SL1	40 11/32"	6 3/4"	26 13/16"	18 3/16"	12 7/16"
RHLINER 48S SL1	46 11/32"	9 3/4"	26 13/16"	18 3/16"	12 7/16"

Construction Options (see page 42): ■ or ◆ = Available for selected SKUs

Spice Rack Kit

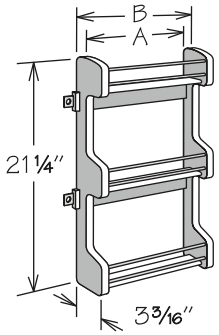

- Field installation accessory
- For wall cabinets 30" or higher
- Position cabinet adjustable shelves prior to installation
- Natural finish solid wood with chrome rails
- Three fixed shelves
- SRK15 mounts to 15" wide door
- SRK18 mounts to 18" wide door
- SRK21 mounts to 21" wide door

	A	B
SRK15	9½"	10½"
SRK18	12½"	13½"
SRK21	15½"	16½"

Stem Glass Holder

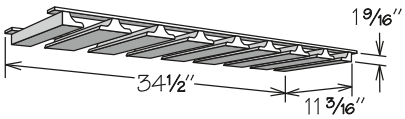

- Field trimmable to install below 18", 24", 30", or 36" wide wall cabinet
- All door styles feature solid wood finished to match cabinet box exterior
- Maximum stem glass base is 3½" in diameter
- Not sized to fit modified depth cabinets

SGH36U

Wine Rack

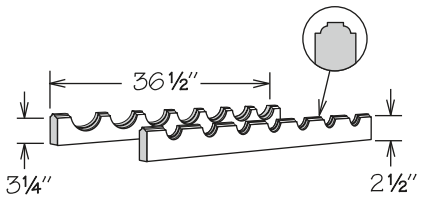

- Accommodates seven bottles
- Field trimmable to 24" (five bottles) or 30" (six bottles)
- All door styles feature solid wood finished to match cabinet box exterior

WR36

Floating Shelf

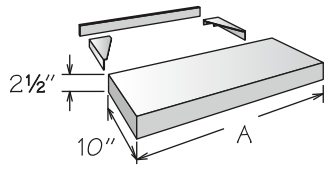

- Not trimmable
- Finished on all sides to match cabinet box exterior
- Features veneered engineered wood top and bottom and solid wood front and sides
- When installed between two cabinets, Furniture Ends (FE) or Wall End Panel (WEP) is recommended for adjacent cabinets
- Must be secured to studs in wall
- Installation instructions, mounting brackets and screws included

10" DEEP	A	MAX. LOAD
FLSH2410	24"	30 lbs.
FLSH3010	30"	37 lbs.
FLSH3610	36"	45 lbs.
FLSH4210	42"	52 lbs.
FLSH4810	48"	60 lbs.

Finished Shelf

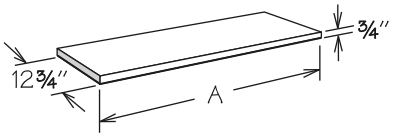

- Finished shelves feature veneered engineered wood, edge banded on all sides with top and bottom finished to match cabinet box exterior
- Field trimmable

	A
FS4812	48¼"
FS6012	60¼"
FS7212	72¼"

Construction Options (see page 42): ■ or ◆ = Available for selected SKUs

Blind Corner Closure

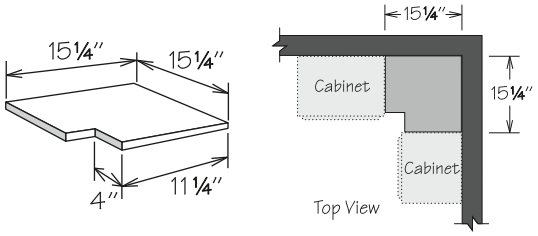

- Features ½" engineered wood finished with natural woodgrain finish on both sides
- Field trimmable

BLC1515

Glass Shelf Kit

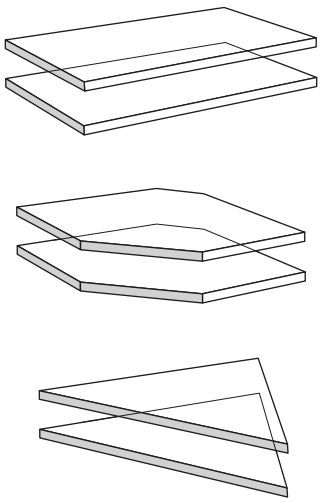

- Glass Shelf Kit includes two ¼" high-strength tempered glass shelves
- Can be used with existing shelf rests or order SHELF REST MFD PK separately
- Refer to individual SKU box for number of shelves required and/or available
- GSK12 – GSK36 is 10¼" deep
- GSK12-15 – GSK36-15 is 13¼" deep
- Tempered glass cannot be field trimmed
- Glass Shelf Kits 12" - 24" wide have a 15 lb. per square foot load rating
- Glass Shelf Kits 27" - 36" wide have a 5 lb. per square foot load rating

12" DEEP	15" DEEP
GSK12	GSK12-15
GSK15	GSK15-15
GSK18	GSK18-15
GSK21	GSK21-15
GSK24	GSK24-15
GSK27	GSK27-15
GSK30	GSK30-15
GSK33	GSK33-15
GSK36	GSK36-15
GSKCW24	GSKCW27
GSKWEA12	

Notes

BASE CABINETS

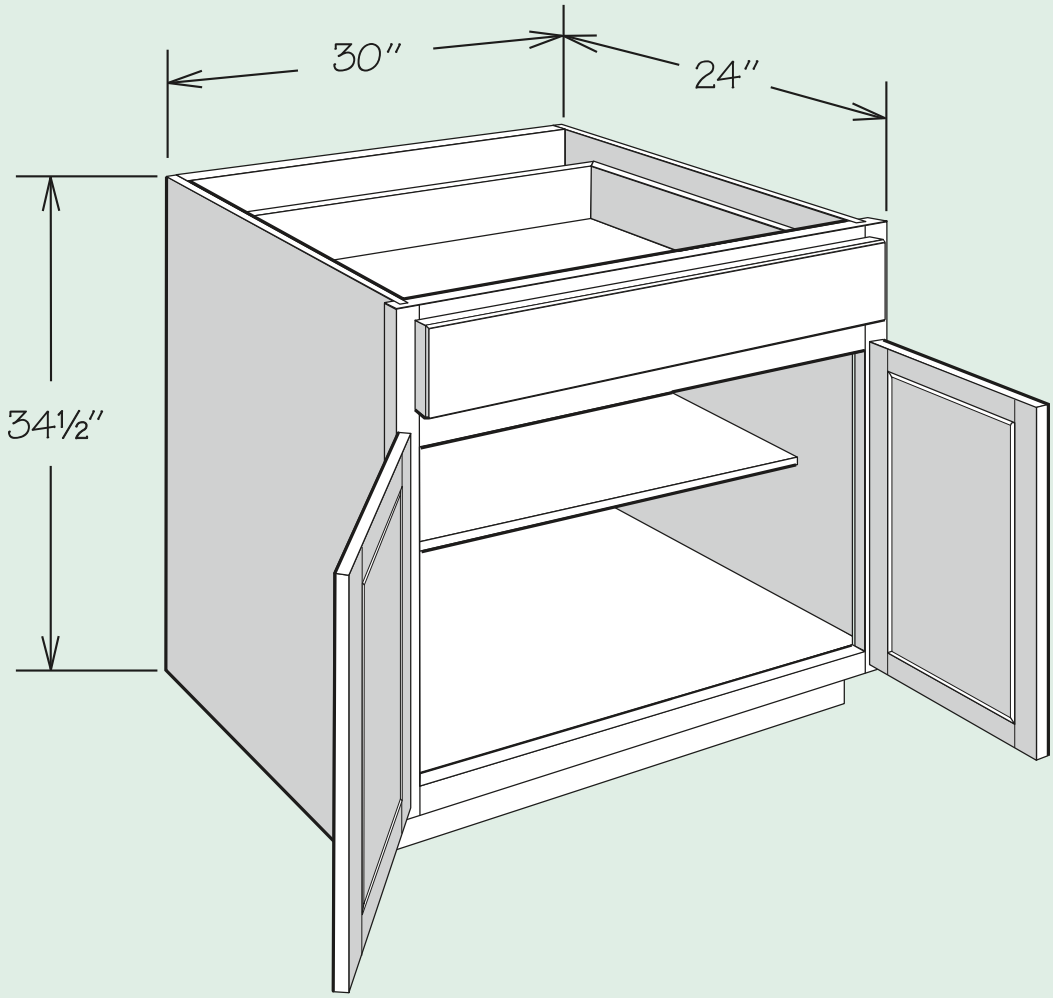

Base Cabinet · 1 Door and 1 Drawer

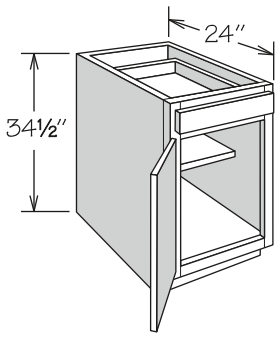

- Half-depth adjustable shelf
- Hinged left and can be reversed in the field
- CCH and CCDW options are available on Portfolio Series only

PORTFOLIO SELECT & POTFOLIO	VALUE BUILT
AH	CFO
APC	FDS
CCH	IF
CCDW	RD
CFO	RTK
FE	VTK
FDS	
IF	
PE	
RD	
RTK	
VTK	

1 SHELF

B12
B15
B18
B21
B24

Base Cabinet · 1 Door, 1 Drawer and Sliding Shelves

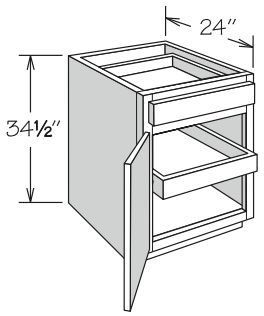

1 SLIDING SHELF

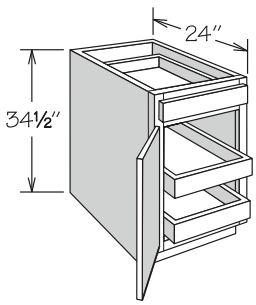

2 SLIDING SHELVES

- Sliding shelves are not adjustable
- Engineered wood sliding shelves with solid hardwood front, MDF bottom, and side-mounted drawer glides
- Hinged left and can be reversed in the field
- CCH and CCDW options are available on Portfolio Series only

PORTFOLIO SELECT & POTFOLIO	VALUE BUILT
AH	RD
APC	RTK
CCH	VTD
CCDW	VTK
CCSS	
FE	
PE	
RD	
RTK	
VTD	
VTK	

1 SLIDING SHELF

B12 SS1
B15 SS1
B18 SS1
B21 SS1
B24 SS1

2 SLIDING SHELVES

B12 SS2
B15 SS2
B18 SS2
B21 SS2
B24 SS2

Base Cabinet · 1 Door, 1 Drawer and Roll-Out Tray Divider

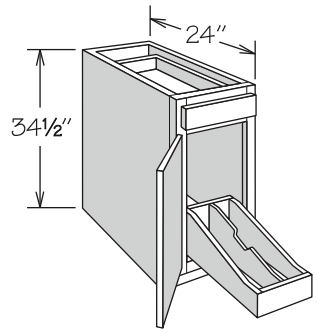

- Roll-Out Tray Divider now features CushionClose glides
- Cabinets indicated with an asterisk (*) are available for Portfolio Select and Portfolio Series only
- Roll-Out Tray Divider in natural finish solid wood and wood veneer with dovetail (front only) construction and full-extension CushionClose glides
- B12 CCROTD features two compartments (one partition)
- B15 CCROTD features three compartments (two partitions)
- Partitions are field installed
- No shelf
- Hinged left and can be reversed in the field
- CCH and CCDW options are available on Portfolio Series only - upgraded drawer option applies to top drawer only

PORTFOLIO SELECT & POTFOLIO
AH
APC
CCH
CCDW
FE
PE
RTK
VTK

ROLL-OUT TRAY DIVIDER

*B12 CCROTD
*B15 CCROTD

*N/A for Value Built

Base Cabinet · 1 Door, 1 Drawer and Pot & Pan Organizer

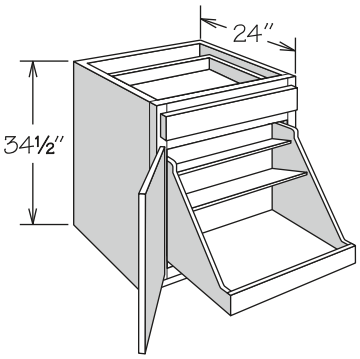

- Base Pot & Pan Organizer now features CushionClose glides
- Cabinets indicated with an asterisk (*) are available for Portfolio Select and Portfolio Series only
- Organizer in natural finish solid wood and wood veneer with dovetail (front only) construction and full-extension CushionClose glides
- Top shelf of organizer measures 6 3/16" deep
- Middle shelf of organizer measures 9¾" deep
- Hinged left and can be reversed in the field
- CCH and CCDW options are available on Portfolio Series only - upgraded drawer option applies to top drawer only

PORTFOLIO SELECT & POTFOLIO

AH
APC
CCH
CCDW
FE
IF
PE
RTK
VTD
VTK

BASE POT & PAN ORGANIZER

*B24 CCBPPO

*N/A for Value Built

Base Cabinet · 1 Drawer and Door with Wastebasket Pull-Out

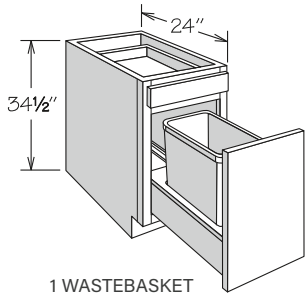

1 WASTEBASKET

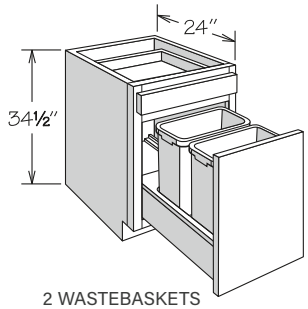

2 WASTEBASKETS

- Portfolio Select wastebasket pull-out now features heavy-duty full-extension CushionClose glides (132 pound rated)
- Portfolio and Value Built wastebasket pull-out features heavy-duty full-extension glides (100 pound rated)
- Wastebasket rests in a natural finish wood frame
- BWBB15 features one silver plastic 35-quart capacity bin
- BWBB15-2 features two silver plastic 27-quart capacity bins
- BWBB18-2 and BWBB21-2 feature two silver plastic 35-quart capacity bins
- Decorative hardware strongly recommended
- CCDW option is available on Portfolio Series only - option applies to top drawer and wastebasket pull-out

PORTFOLIO SELECT & POTFOLIO

AH
APC
CCDW
FE
IF
PE
RTK
VTK

VALUE BUILT

IF
RTK
VTK

1 WASTEBASKET

BWBB15

2 WASTEBASKETS

BWBB15-2
BWBB18-2
BWBB21-2

Base Cabinet · Drawer Accesories · 1 Door

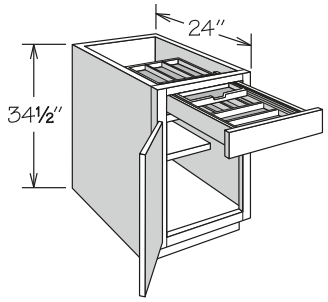

1 SHELF
18" Wood Tiered Cutlery Divider Shown

- Cabinets indicated with an asterisk (*) are available for Portfolio Select and Portfolio Series only
- Portfolio door styles feature solid hardwood dovetail drawer with full-access glides
- Cutlery Divider features solid hardwood and plywood in natural finish
- Spice Drawer Insert features solid hardwood and plywood in natural finish and accommodates most spice containers (not included)
- Wood Tiered Cutlery Divider features:
  - » Solid hardwood and plywood in natural finish
  - » Upper section slides independently from drawer
- Refer to specifications on individual cabinets and accessories for more details
- CCH and CCDW options are available on Portfolio Series only

PORTFOLIO SELECT & POTFOLIO

APC
CCH
CCDW
CCSS ■
FDS ◆
FE
PE
RTK
VTK

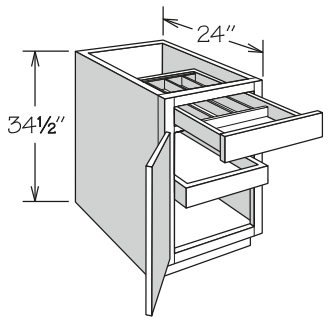

1 SLIDING SHELF
18" Cutlery Divider Shown

WOOD TIERED CUTLERY DIVDER	UPPER SECTION	LOWER SECTION
15"	5	5
18"	5	6
21"	6	7
24"	7	7

CUTLERY DIVDER	SECTIONS
15"	4
18"	5
21"	6
24"	6

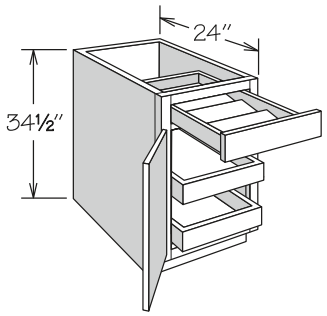

2 SLIDING SHELVES
18" Spice Drawer Insert Shown

1 SHELF

Wood Tiered Cutlery Divider
*B15 WTCD ◆
*B18 WTCD ◆
*B21 WTCD ◆
*B24 WTCD ◆
*N/A for Value Built

Cutlery Divider
*B15 CD ◆
*B18 CD ◆
*B21 CD ◆
*B24 CD ◆
*N/A for Value Built

Spice Drawer Insert
*B15 SDI ◆
*B18 SDI ◆
*B21 SDI ◆
*B24 SDI ◆
*N/A for Value Built

1 SLIDING SHELF

Wood Tiered Cutlery Divider
*B15 SS1 WTCD ■
*B18 SS1 WTCD ■
*B21 SS1 WTCD ■
*B24 SS1 WTCD ■
*N/A for Value Built

Cutlery Divider
*B15 SS1 CD ■
*B18 SS1 CD ■
*B21 SS1 CD ■
*B24 SS1 CD ■
*N/A for Value Built

Spice Drawer Insert
*B15 SS1 SDI ■
*B18 SS1 SDI ■
*B21 SS1 SDI ■
*B24 SS1 SDI ■
*N/A for Value Built

2 SLIDING SHELVES

Wood Tiered Cutlery Divider
*B15 SS2 WTCD ■
*B18 SS2 WTCD ■
*B21 SS2 WTCD ■
*B24 SS2 WTCD ■
*N/A for Value Built

Cutlery Divider
*B15 SS2 CD ■
*B18 SS2 CD ■
*B21 SS2 CD ■
*B24 SS2 CD ■
*N/A for Value Built

Spice Drawer Insert
*B15 SS2 SDI ■
*B18 SS2 SDI ■
*B21 SS2 SDI ■
*B24 SS2 SDI ■
*N/A for Value Built

Base Cabinet · 2 Butt Doors and 1 Drawer

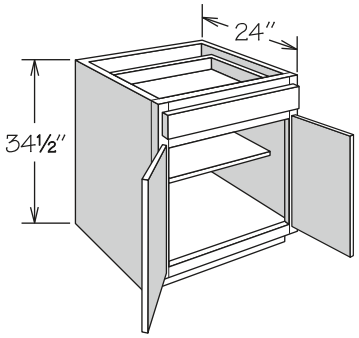

- Half-depth adjustable shelf
- CCH and CCDW options are available on Portfolio Series only

PORTFOLIO SELECT & POTFOLIO

AH
APC
CCH
CCDW
CFO
FE
FDS
IF
PE
RD
RTK
VTK

VALUE BUILT

CFO
FDS
IF
RD
RTK
VTK

1 SHELF

B24 BUTT
B27 BUTT
B30 BUTT
B33 BUTT
B36 1TD BUTT

Base Cabinet · 2 Butt Doors, 1 Drawer and Sliding Shelves

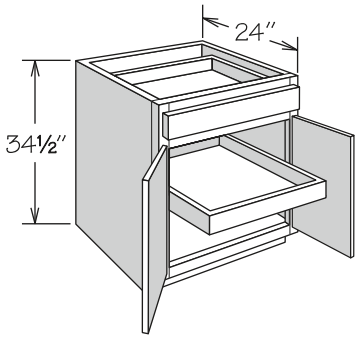

1 SLIDING SHELF

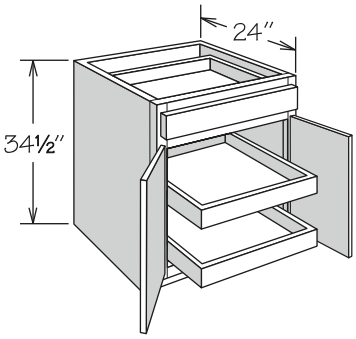

2 SLIDING SHELVES

- Sliding shelves are not adjustable
- Engineered wood sliding shelves with solid hardwood front, MDF bottom, and side-mounted drawer glides
- CCH and CCDW options are available on Portfolio Series only

PORTFOLIO SELECT & POTFOLIO
AH
APC
CCH
CCDW
CCSS
FE
PE
RD
RTK
VTD
VTK

VALUE BUILT
RD
RTK
VTD
VTK

1 SLIDING SHELF

B24 SS1 BUTT
B27 SS1 BUTT
B30 SS1 BUTT
B33 SS1 BUTT
B36 SS1 1TD BUTT

2 SLIDING SHELVES

B24 SS2 BUTT
B27 SS2 BUTT
B30 SS2 BUTT
B33 SS2 BUTT
B36 SS2 1TD BUTT

Base Cabinet · 2 Butt Doors, 1 Drawer and Pot & Pan Organizer

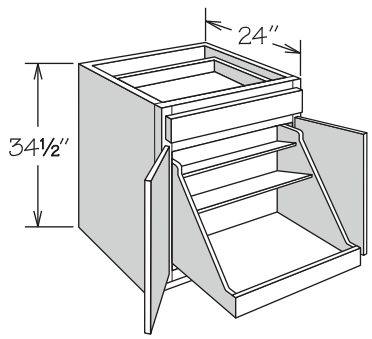

- Base Pot & Pan Organizer now features CushionClose glides
- Cabinets indicated with an asterisk (*) are available for Portfolio Select and Portfolio Series only
- Organizer in natural finish solid wood and wood veneer with dovetail (front only) construction full-extension CushionClose glides
- Top shelf of organizer measures 6 3/16" deep
- Middle shelf of organizer measures 9 3/4" deep
- CCH and CCDW options are available on Portfolio Series only - upgraded drawer option applies to top drawer only

PORTFOLIO SELECT & POTFOLIO
AH
APC
CCH
CCDW
FE
IF
PE
RTK
VTD
VTK

BASE POT & PAN ORGANIZER

*B24 BUTT CCBPPO
*B27 BUTT CCBPPO
*B30 BUTT CCBPPO
*B33 BUTT CCBPPO
*B36 1TD BUTT CCBPPO
*N/A for Value Built

Base Cabinet · Drawer Accesories · 2 Butt Doors

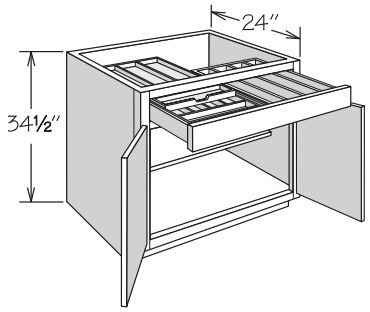

1 SHELF
30" Wood Tiered Cutlery Divider Shown

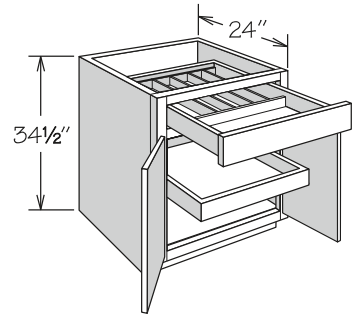

1 SLIDING SHELF
24" Cutlery Divider Shown

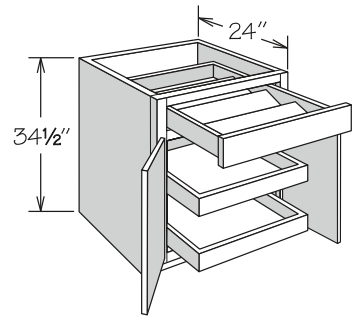

2 SLIDING SHELVES
24" Spice Drawer Insert Shown

- Cabinets indicated with an asterisk (*) are available for Portfolio Select and Portfolio Series only
- Portfolio door styles feature solid hardwood dovetail drawer with full-access glides
- Cutlery Divider features solid hardwood and plywood in natural finish
- Spice Drawer Insert features solid hardwood and plywood in natural finish and accommodates most spice containers (not included)
- Wood Tiered Cutlery Divider features:
  - » Solid hardwood and plywood in natural finish
  - » Upper section slides independently from drawer
  - » Additional cooking Utensil Section on 30" or wider
- Refer to specifications on individual cabinets and accessories for more details
- CCH and CCDW options are available on Portfolio Series only

PORTFOLIO SELECT & POTFOLIO

APC
CCH
CCDW
CCSS ■
FDS ◆
FE
PE
RTK
VTK

WOOD TIERED CUTLERY DIVDER	UPPER SECTIONS	LOWER SECTIONS	COOKING UTENSIL SECTIONS
24"	7	7	-
30"	5	5	4
36"	5	5	5

CUTLERY DIVDER	SECTIONS
24"	6
30"	7
36"	8

1 SHELF

Wood Tiered Cutlery Divider
*B24 BUTT WTCD ◆
*B30 BUTT WTCD ◆
*B36 1TD BUTT WTCD ◆
*N/A for Value Built

Cutlery Divider
*B24 BUTT CD ◆
*B30 BUTT CD ◆
*B36 1TD BUTT CD ◆
*N/A for Value Built

Spice Drawer Insert
*B24 BUTT SDI ◆
*N/A for Value Built

1 SLIDING SHELF

Wood Tiered Cutlery Divider
*B24 SS1 BUTT WTCD ■
*B30 SS1 BUTT WTCD ■
*B36 1TD SS1 BUTT WTCD ■
*N/A for Value Built

Cutlery Divider
*B24 SS1 BUTT CD ■
*B30 SS1 BUTT CD ■
*B36 1TD SS1 BUTT CD ■
*N/A for Value Built

Spice Drawer Insert
*B24 SS1 BUTT SDI ■
*N/A for Value Built

2 SLIDING SHELVES

Wood Tiered Cutlery Divider
*B24 SS2 BUTT WTCD ■
*B30 SS2 BUTT WTCD ■
*B36 1TD SS2 BUTT WTCD ■
*N/A for Value Built

Cutlery Divider
*B24 SS2 BUTT CD ■
*B30 SS2 BUTT CD ■
*B36 1TD SS2 BUTT CD ■
*N/A for Value Built

Spice Drawer Insert
*B24 SS2 BUTT SDI ■
*N/A for Value Built

Base Cabinet · 2 Doors and 2 Drawers

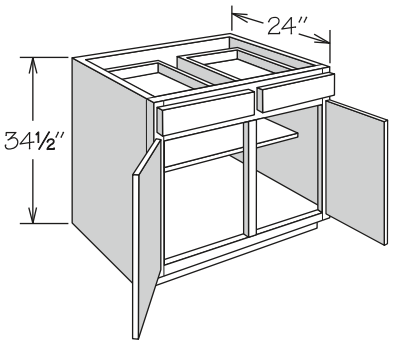

- Half-depth adjustable shelf
- Center support for shelf provided
- CCH and CCDW options are available on Portfolio Series only

PORTFOLIO SELECT & POTFOLIO

AH
APC
CCH
CCDW
CFO
FDS
FE
IF
PE
RD
RTK
VTK

VALUE BUILT

CFO
FDS
IF
RD
RTK
VTK

1 SHELF

B39
B42
B48

Construction Options (see page 42): ■ or ◆ = Available for selected SKUs

Base Cabinet · 2 Doors, 2 Drawers and Sliding Shelves

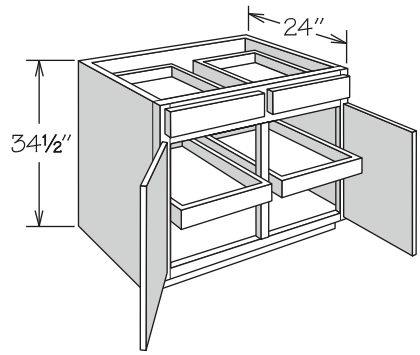

2 SLIDING SHELVES

- Sliding shelves are not adjustable
- Engineered wood sliding shelves with solid hardwood front, MDF bottom, and side-mounted drawer glides
- CCH and CCDW options are available on Portfolio Series only

PORTFOLIO SELECT & POTFOLIO	VALUE BUILT
AH	RD
APC	RTK
CCH	VTD
CCDW	VTK
CCSS	
FE	
PE	
RD	
RTK	
VTD	
VTK	

2 SLIDING SHELVES

B39 SS1
B42 SS1
B48 SS1

4 SLIDING SHELVES

B39 SS2
B42 SS2
B48 SS2

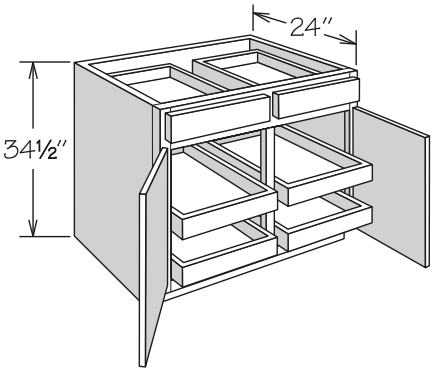

4 SLIDING SHELVES

Base Cabinet · 3 Doors and 3 Drawers

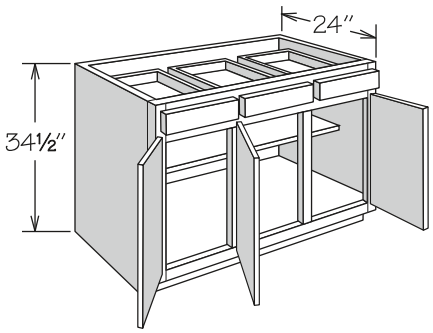

- Half-depth adjustable shelf
- Center support for shelf provided
- Hinged as shown – can be reversed in the field
- CCH and CCDW options are available on Portfolio Series only

PORTFOLIO SELECT & POTFOLIO	VALUE BUILT
AH	CFO
APC	FDS
CCH	IF
CCDW	RD
CFO	RTK
FDS	VTK
FE	
IF	
PE	
RD	
RTK	
VTK	

1 SHELF

B45

Base Cabinet · 3 Doors, 3 Drawers and Sliding Shelves

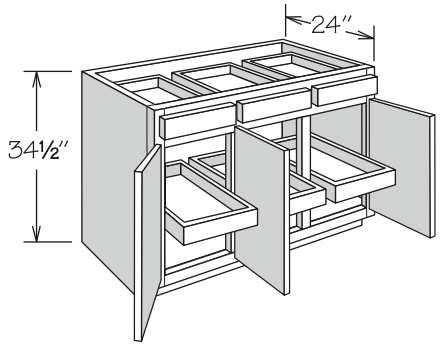

3 SLIDING SHELVES

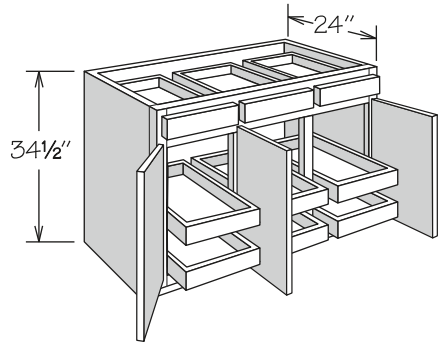

6 SLIDING SHELVES

- Sliding shelves are not adjustable
- Engineered wood sliding shelves with solid hardwood front, MDF bottom, and side-mounted drawer glides
- Hinged as shown – can be reversed in the field
- CCH and CCDW options are available on Portfolio Series only

PORTFOLIO SELECT & POTFOLIO	VALUE BUILT
AH	RD
APC	RTK
CCH	VTD
CCDW	VTK
CCSS	
FE	
PE	
RD	
RTK	
VTD	
VTK	

3 SLIDING SHELVES
B45 SS1

6 SLIDING SHELVES
B45 SS2

Full-Height Base Cabinet · 1 Door

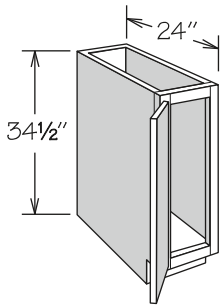

NO SHELF

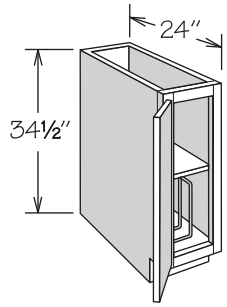

1 SHELF & TRAY DIVIDER

- Full-height door
- Recessed Toe Kick Option available left (RTKL) or right (RTKR) only
- TB9 TDS is only available with RD-23 though RD-14
- TB9 TDS features full-depth adjustable shelf (S924) and Tray Divider (TD3) packaged separately for field installation
- Hinged left and can be reversed in the field
- CCH option is available on Portfolio Series only

PORTFOLIO SELECT & POTFOLIO	VALUE BUILT
AH	CFO ■
APC	RD
CCH	RTK
CFO ■	VTK
FE	
PE	
RD	
RTK	
VTK	

NO SHELF
TB9 ■

1 SHELF & TRAY DIVIDER
TB9 TDS

Full-Height Base Cabinet · 1 Door

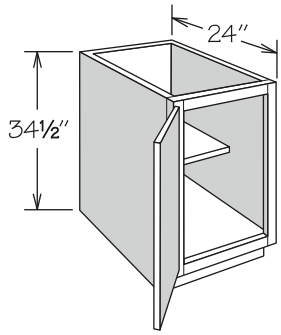

- Half-depth adjustable shelf
- Full-height door
- Hinged left and can be reversed in the field
- CCH option is available on Portfolio Series only

PORTFOLIO SELECT & POTFOLIO	VALUE BUILT
AH	CFO
APC	FDS
CCH	RD
CFO	RTK
FDS	VTK
FE	
PE	
RD	
RTK	
VTK	

1 SHELF
B12 FH
B15 FH
B18 FH
B21 FH
B24 FH

Full-Height Base Cabinet · 1 Door and Sliding Shelves

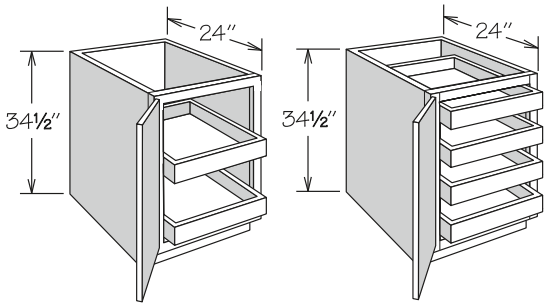

2 SLIDING SHELVES | 4 SLIDING SHELVES

- Full-height door
- Sliding shelves are not adjustable
- Engineered wood sliding shelves with solid hardwood front, MDF bottom, and side-mounted drawer glides
- Distance between two sliding shelves is 10 13/16"
- Distance between four sliding shelves is 4 7/16"
- Hinged left and can be reversed in the field
- CCH option is available on Portfolio Series only

PORTFOLIO SELECT & POTFOLIO	VALUE BUILT
AH	RD
APC	RTK
CCH	VTK
CCSS	
FE	
PE	
RD	
RTK	
VTK	

2 SLIDING SHELVES

B12 FH SS2
B15 FH SS2
B18 FH SS2
B21 FH SS2
B24 FH SS2

4 SLIDING SHELVES

B12 FH SS4
B15 FH SS4
B18 FH SS4
B21 FH SS4
B24 FH SS4

Full-Height Base Cabinet · 1 Door and Base Mixer Lift

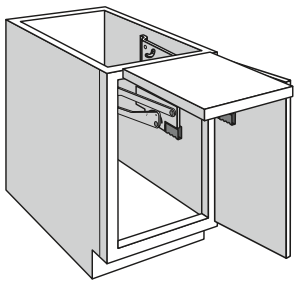

- Cabinets indicated with as asterisk (*) are available for Portfolio Select and Portfolio Series only
- Full-height door
- Features Furniture Ends standard
- Includes 1⅜" thick natural finish solid wood shelf and one pair of shock dampening, adjustable tension lifts
- Supports up to 60 pounds
- Cannot be used with Sliding Shelf or adjustable shelf
- Kit packaged separately for field installation

PORTFOLIO SELECT & POTFOLIO
AH
APC
CCH
RTK
VTK

BASE MIXER LIFT

*B18 FH MLK
*N/A for Value Built

Full-Height Base Cabinet · 1 Door with Tray Divider Pull-Out

NEW! SIZE

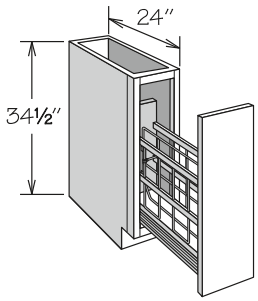

- Features CushionClose glides
- Cabinets indicated with an asterisk (*) are available for Portfolio Select and Portfolio Series only
- Full-height door
- Tray divider is adjustable to accommodate various storage solutions
- Decorative hardware strongly recommended
- BTDP9 CC not available with Recessed Toe Kick Both Option (RTKB)

PORTFOLIO SELECT & POTFOLIO
AH
APC
FE
PE
RTK
VTK

TRAY DIVIDER PULL-OUT

*BTDP9 CC
*BTDP12 CC
*N/A for Value Built

Full-Height Base Cabinet · 1 Door with Utensil Storage Pull-Out

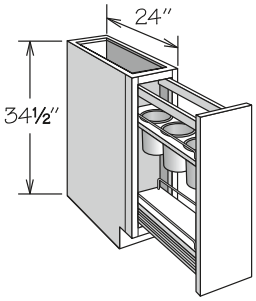

- Features CushionClose glides
- Cabinets indicated with an asterisk (*) are available for Portfolio Select and Portfolio Series only
- Full-height door
- One fixed bottom and one adjustable lower shelf in a natural finish with chrome rails
- One fixed upper shelf in a natural finish with chrome rails and three stainless steel removable storage bins
- Stainless steel bins measure 5¼" wide x 6⅞" deep
- Decorative hardware strongly recommended
- BPPUS9 CC not available with Recessed Toe Kick Both Option (RTKB)

PORTFOLIO SELECT & POTFOLIO
AH
APC
FE
PE
RTK
VTK

UTENSIL STORAGE PULL-OUT

*BPPUS9 CC
*BPPUS12 CC
*N/A for Value Built

Full-Height Base Cabinet · 1 Door with Base Pantry Pull-Out

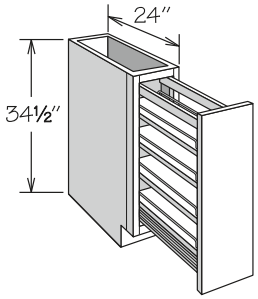

- Features CushionClose glides
- Cabinets indicated with an asterisk (*) are available for Portfolio Select and Portfolio Series only
- Full-height door
- One fixed and three adjustable shelves with chrome rails
- Decorative hardware strongly recommended
- BPP9 CC not available with Recessed Toe Kick Both Option (RTKB)

PORTFOLIO SELECT & POTFOLIO

AH
APC
FE
PE
RTK
VTK

BASE PANTRY PULL-OUT

*BPP9 CC
*BPP12 CC
*N/A for Value Built

Full-Height Base Cabinet · 1 Door with Wastebasket Pull-Out

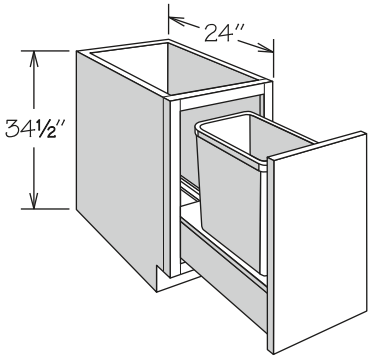

1 WASTEBASKET

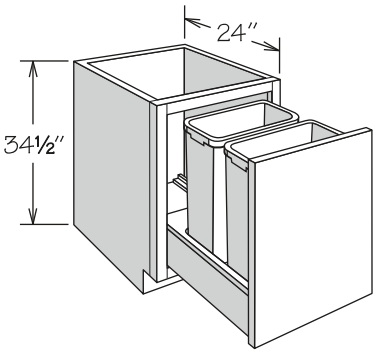

2 WASTEBASKETS

- Features CushionClose glides
- Portfolio and Value Built wastebasket pull-out features heavy-duty full-extension glides (100 pound rated)
- Full-height door
- Wastebasket rests in a natural finish wood frame
- BWBB15 FH and BWBB18 FH features one silver plastic 50-quart capacity bin
- BWBB21-2 FH features two silver plastic 50-quart capacity bins
- Decorative hardware strongly recommended
- CCDW option is available on Portfolio Series only

PORTFOLIO SELECT & POTFOLIO

AH
APC
CCDW
FE
PE
RTK
VTK

VALUE BUILT

RTK
VTK

1 WASTEBASKET

BWBB15 FH
BWBB18 FH

2 WASTEBASKETS

BWBB21-2 FH

Full-Height Base Cabinet · 2 Butt Doors

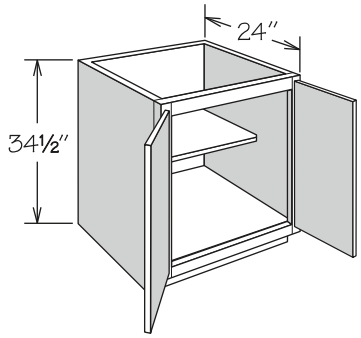

- Half-depth adjustable shelf
- Full-height butt doors
- CCH option is available on Portfolio Series only

PORTFOLIO SELECT & POTFOLIO

AH
APC
CCH
CFO
FDS
FE
PE
RD
RTK
VTK

VALUE BUILT

CFO
FDS
RD
RTK
VTK

1 SHELF

B24 BUTT FH
B27 BUTT FH
B30 BUTT FH
B33 BUTT FH
B36 BUTT FH

Construction Options (see page 42): ■ or ◆ = Available for selected SKUs

Full-Height Base Cabinet · 2 Butt Doors and Sliding Shelves

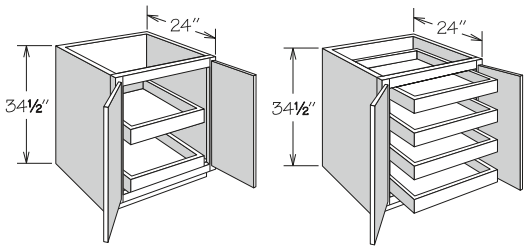

2 SLIDING SHELVES | 4 SLIDING SHELVES

- Full-height butt doors
- Sliding shelves are not adjustable
- Engineered wood sliding shelves with solid hardwood front, MDF bottom, and side-mounted drawer glides
- Distance between two sliding shelves is 10 13/16"
- Distance between four sliding shelves is 4 7/16"
- CCH option is available on Portfolio Series only

PORTFOLIO SELECT & POTFOLIO	VALUE BUILT
AH	RD
APC	RTK
CCH	VTK
CCSS	
FE	
PE	
RD	
RTK	
VTK	

2 SLIDING SHELVES

B24 BUTT FH SS2
B27 BUTT FH SS2
B30 BUTT FH SS2
B33 BUTT FH SS2
B36 BUTT FH SS2

4 SLIDING SHELVES

B24 BUTT FH SS4
B27 BUTT FH SS4
B30 BUTT FH SS4
B33 BUTT FH SS4
B36 BUTT FH SS4

Furniture Drawer Cabinet · 1 Drawer

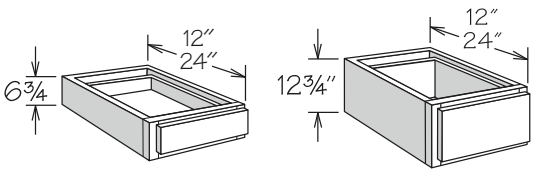

6" HIGH | 12" HIGH

- 6" high features one standard drawer and 12" high features one large drawer
- 24" deep Furniture Drawer cabinets are only available with RD-23 through RD-13
- Bottom of cabinet frame must be fully supported
- CCDW option is available on Portfolio Series only

PORTFOLIO SELECT & POTFOLIO	VALUE BUILT
APC	CFO
CCDW	RD ■
CFO	VTK
FE	
PE	
RD ■	
VTK	

6" HIGH • 1 DRAWER

12" Deep	24" Deep
FD121206	FD122406 ■
FD151206	FD152406 ■
FD181206	FD182406 ■
FD211206	FD212406 ■
FD241206	FD242406 ■
FD271206	FD272406 ■
FD301206	FD302406 ■
FD331206	FD332406 ■
FD361206	FD362406 ■

12" HIGH • 1 DRAWER

12" Deep	24" Deep
FD121212	FD122412 ■
FD151212	FD152412 ■
FD181212	FD182412 ■
FD211212	FD212412 ■
FD241212	FD242412 ■
FD271212	FD272412 ■
FD301212	FD302412 ■
FD331212	FD332412 ■
FD361212	FD362412 ■

Pedestal Drawer Cabinet · 1 Drawer

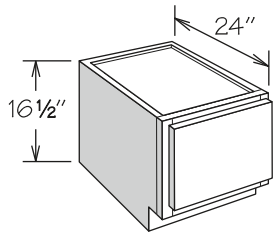

- One large drawer
- Features solid top
- CCDW option is available on Portfolio Series only

PORTFOLIO SELECT & POTFOLIO	VALUE BUILT
APC	CFO
CCDW	RD
CFO	RTK
FE	VTK
PE	
RD	
RTK	
VTK	

1 DRAWER

PD1217 1DWR
PD1517 1DWR
PD1817 1DWR
PD2117 1DWR
PD2417 1DWR
PD2717 1DWR
PD3017 1DWR
PD3317 1DWR
PD3617 1DWR

Drawer Base Cabinet · 2 Large Drawers

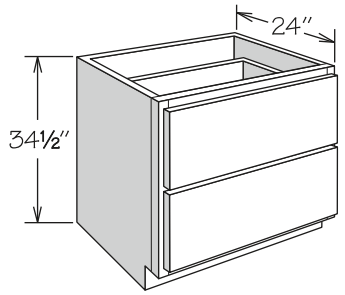

- Cabinets indicated with an asterisk (*) are available for Portfolio Select and Portfolio only
- Two large dovetail drawers with extra large drawer fronts
- Drawer body measures 6 15/16" deep
- Only available with RD-23 through RD-21
- Drawers feature full-extension CushionClose heavy-duty 132 pound rated glides

PORTFOLIO SELECT & POTFOLIO

AH
APC
CFO
FE
PE
RD
RTK
VTK

2 DRAWERS

*DB21 2DWR
*DB24 2DWR
*DB27 2DWR
*DB30 2DWR
*DB33 2DWR
*DB36 2DWR

**N/A for Value Built*

Drawer Base Cabinet · 2 Large Drawers and Scalloped Sliding Shelf

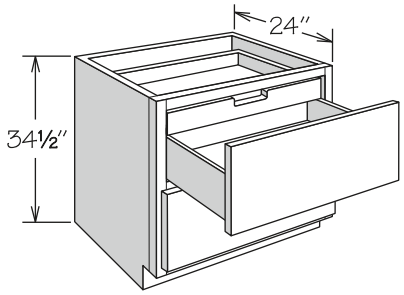

- Cabinets indicated with an asterisk (*) are available for Portfolio Select and Portfolio only
- Two large dovetail drawers with extra large drawer fronts
- Drawer body measures 6 15/16" deep
- Only available with RD-23 through RD-21
- Scalloped dovetail Sliding Shelf with CushionClose Glides in top opening
- Drawers feature full-extension CushionClose heavy-duty 132 pound rated glides

PORTFOLIO SELECT & POTFOLIO

AH
APC
FE
PE
RD
RTK
VTK

2 DRAWERS

*DB21 2DWR SFWT
*DB24 2DWR SFWT
*DB27 2DWR SFWT
*DB30 2DWR SFWT
*DB33 2DWR SFWT
*DB36 2DWR SFWT

**N/A for Value Built*

Drawer Base Cabinet · 2 Drawers and Peg Dish Organizer

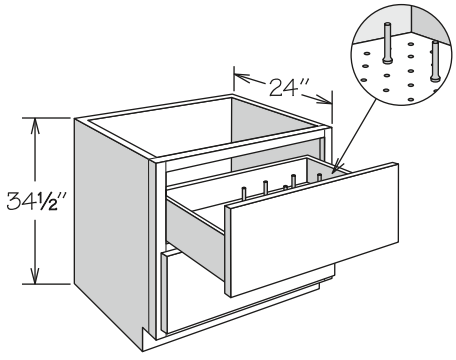

- Cabinets indicated with an asterisk (*) are available for Portfolio Select and Portfolio only
- Two large dovetail drawers with extra large drawer fronts
- Drawer body measures 6 15/16" deep
- One Peg Dish Organizer Kit (organizer and adjustable pegs) in natural finish, packaged separately for field installation
- Additional pegs (PEG KIT 4 PK) and Peg Dish Organizer Kits (PDO_) can be ordered separately
- Drawers feature full-extension CushionClose heavy-duty 132 pound rated glides

PORTFOLIO SELECT & POTFOLIO

AH
APC
FE
PE
RTK
VTK

2 DRAWERS	PEG COUNT
*DB21 2DWR PDO	8
*DB24 2DWR PDO	12
*DB27 2DWR PDO	12
*DB30 2DWR PDO	12
*DB33 2DWR PDO	12
*DB36 2DWR PDO	12

**N/A for Value Built*

Drawer Base Cabinet · 2 Drawers, Scalloped Sliding Shelf and Peg Dish Organizer

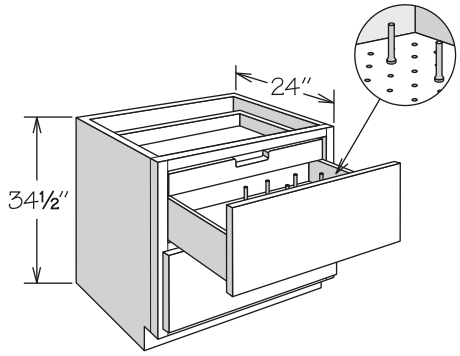

- Cabinets indicated with an asterisk (*) are available for Portfolio Select and Portfolio only
- Two large dovetail drawers with extra large drawer fronts
- Drawer body measures 6 15/16" deep
- Scalloped dovetail Sliding Shelf with CushionClose Glides in top opening
- One Peg Dish Organizer Kit (organizer and adjustable pegs) in natural finish, packaged separately for field installation
- Additional pegs (PEG KIT 4 PK) and Peg Dish Organizer Kits (PDO_) can be ordered separately
- Drawers feature full-extension CushionClose heavy-duty 132 pound rated glides

PORTFOLIO SELECT & POTFOLIO

AH
APC
FE
PE
RTK
VTK

2 DRAWERS	PEG COUNT
*DB21 2DWR SFWT PDO	8
*DB24 2DWR SFWT PDO	12
*DB27 2DWR SFWT PDO	12
*DB30 2DWR SFWT PDO	12
*DB33 2DWR SFWT PDO	12
*DB36 2DWR SFWT PDO	12

N/A for Value Built

Drawer Base Cabinet · 3 Drawers

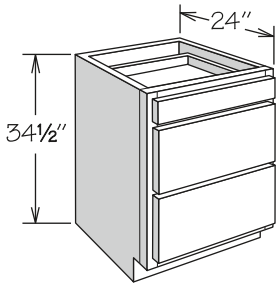

- One standard and two large drawers
- CCDW option is available on Portfolio Series only

PORTFOLIO SELECT & POTFOLIO

AH
APC
CCDW
CFO
FE
PE
RD
RTK
VTD
VTK

VALUE BUILT

CFO
RD
RTK
VTD
VTK

3 DRAWERS
DB12
DB15
DB18
DB21
DB24
DB27
DB30
DB33
DB36 1TD

Drawer Base Cabinet · 4 Drawers

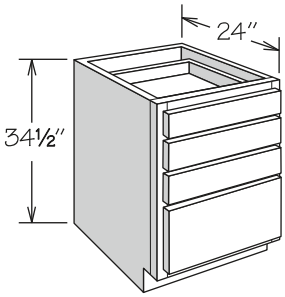

- One large and three standard drawers
- CCDW option is available on Portfolio Series only

PORTFOLIO SELECT & POTFOLIO

AH
APC
CCDW
CFO
FE
PE
RD
RTK
VTD
VTK

VALUE BUILT

CFO
RD
RTK
VTD
VTK

4 DRAWERS
DB12 4DWR
DB15 4DWR
DB18 4DWR
DB21 4DWR
DB24 4DWR

Drawer Base Cabinet · Drawer Accessories

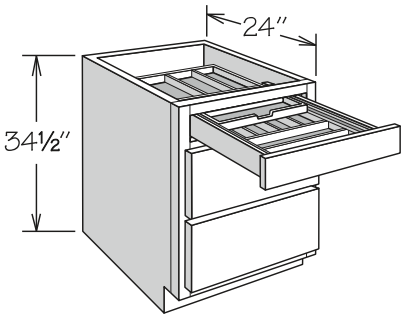

3 DRAWER
18" Wood Tiered Cutlery Divider Shown

PORTFOLIO SELECT & POTFOLIO

APC
CCDW
FE
PE
RTK
VTK

- Cabinets indicated with an asterisk (*) are available for Portfolio Select and Portfolio Series only
- Top drawer on Portfolio door styles feature solid hardwood dovetail drawer with full-access glides - remaining drawers will utilize engineered wood drawer with side-mounted drawer glides
- Cutlery Divider features solid hardwood and plywood in natural finish
- Spice Drawer Insert features solid hardwood and plywood in natural finish and accommodates most spice containers (not included)
- Wood Tiered Cutlery Divider features:
  - » Solid hardwood and plywood in natural finish
  - » Upper section slides independently from drawer
  - » Additional cooking utensil section on 30" or wider
- Refer to specifications on individual cabinets and accessories for more details
- CCDW option is available on Portfolio Series only

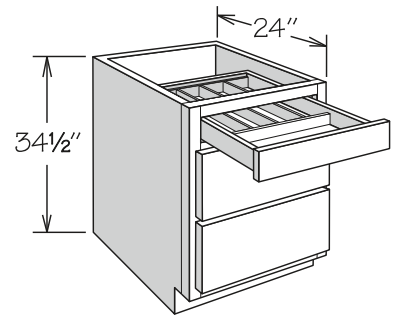

3 DRAWER
18" Cutlery Divider Shown

WOOD TIERED CUTLERY DIVDER	UPPER SECTIONS	LOWER SECTIONS	COOKING UTENSIL SECTIONS
15"	5	5	-
18"	5	6	-
21"	6	7	-
24"	7	7	-
30"	5	5	4
36"	5	6	5

CUTLERY DIVDER	SECTIONS
15"	4
18"	5
21"	6
24"	6
30"	7
36"	8

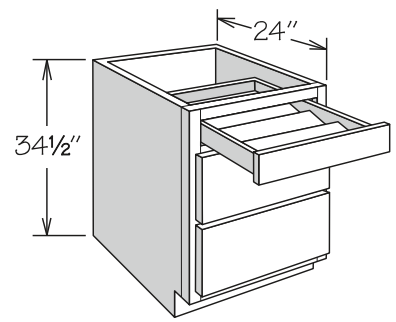

3 DRAWER
18" Spice Drawer Insert Shown

3 DRAWER

Wood Tiered Cutlery Divider
*DB15 WTCD
*DB18 WTCD
*DB21 WTCD
*DB24 WTCD
*DB30 WTCD
*DB36 1TD WTCD
N/A for Value Built

Cutlery Divider
*DB15 CD
*DB18 CD
*DB21 CD
*DB24 CD
*DB30 CD
*DB36 1TD CD
N/A for Value Built

Spice Drawer Insert
*DB15 SDI
*DB18 SDI
*DB21 SDI
*DB24 SDI
N/A for Value Built

4 DRAWER

Wood Tiered Cutlery Divider
*DB15 4DWR WTCD
*DB18 4DWR WTCD
*DB21 4DWR WTCD
*DB24 4DWR WTCD
N/A for Value Built

Cutlery Divider
*DB15 4DWR CD
*DB18 4DWR CD
*DB21 4DWR CD
*DB24 4DWR CD
N/A for Value Built

Spice Drawer Insert
*DB15 4DWR SDI
*DB18 4DWR SDI
*DB21 4DWR SDI
*DB24 4DWR SDI
N/A for Value Built

Peninsula Base · 1 Drawer

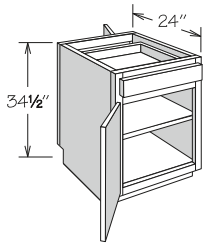

2 DOORS

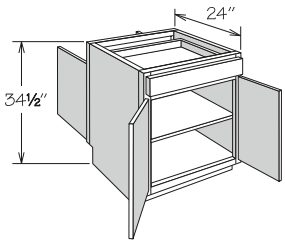

4 BUTT DOORS

- Full-depth adjustable shelf
- Drawer accessible on one side only
- Panel on opposite side of drawer
- When selecting the Recessed Toe Kick Option, the drawer side indicates the front of the cabinet
- Single door cabinets are hinged left and can be reversed in the field
- CCH and CCDW options are available on Portfolio Series only

PORTFOLIO SELECT & POTFOLIO	VALUE BUILT
APC	RD
CCH	RTK
CCDW	VTD
FE	VTK
PE	
RD	
RTK	
VTD	
VTK	

2 DOORS
PB12
PB18
PB24

4 BUTT DOORS
PB24 BUTT
PB30 BUTT
PB36 1TD BUTT

Peninsula Base · 2 Drawers

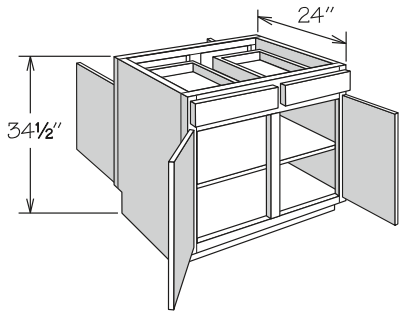

- Full-depth adjustable shelf
- Drawers accessible on one side only
- Features two panels on opposite side of drawers
- When selecting the Recessed Toe Kick Option, the drawer side indicates the front of the cabinet
- CCH and CCDW options are available on Portfolio Series only

PORTFOLIO SELECT & POTFOLIO	VALUE BUILT
APC	RD
CCH	RTK
CCDW	VTD
FE	VTK
PE	
RD	
RTK	
VTD	
VTK	

4 DOORS
PB42

Full-Height Peninsula Base

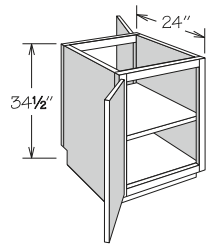

2 DOORS

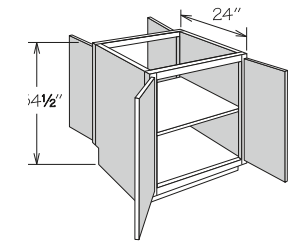

4 BUTT DOORS

- Full-height doors
- Full-depth adjustable shelf
- Single door cabinets are hinged left and can be reversed in the field
- CCH option is available on Portfolio Series only

PORTFOLIO SELECT & POTFOLIO	VALUE BUILT
APC	RD
CCH	RTK
FE	VTK
PE	
RD	
RTK	
VTK	

2 DOORS
PB12 FH
PB18 FH

4 BUTT DOORS
PB24 BUTT FH
PB30 BUTT FH
PB36 BUTT FH

Blind Peninsula Corner Base

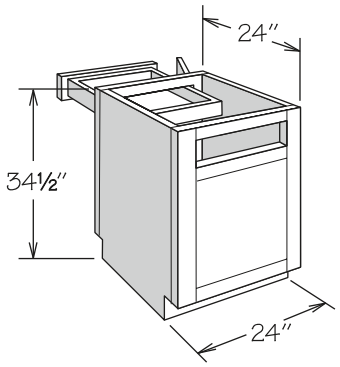

- Half-depth adjustable shelf
- Can be installed left or right
- Universal Fillers are recommended for use between PBC24 and wall and adjoining base cabinet or appliance for hardware clearance and proper door operation
- Cabinet may require pulling from wall – refer to the chart below for specifications
- Roll-out accessories are not recommended
- Must order Universal Fillers separately
- PBC24 is hinged left and can be reversed in the field
- CCH and CCDW options are available on Portfolio Series only

PORTFOLIO SELECT & POTFOLIO	VALUE BUILT
APC	FDS
CCH	RD
CCDW	VTK
FDS	
FE	
PE	
RD	
VTK	

1 DOOR
PBC24

2 BUTT DOORS
PBC24 BUTT

BLIND PENINSULA CORNER BASE INSTALLATION CHART

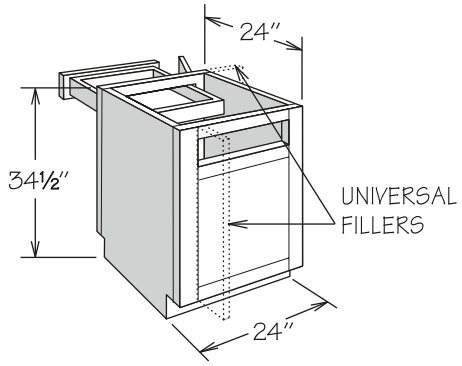

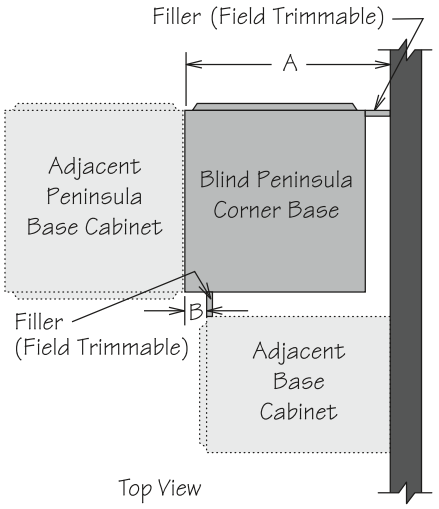

Full Overlay Door Styles

Full overlay door styles require decorative hardware, which has been calculated into dimensions.
*Must use these dimensions if optional Overlay Fillers will be used.

Cabinet	Actual Cabinet Width	Door Opening	Door(s)	Wall Space A			Exposed Frame B		Filler (at wall)	
				Min. Space	Max. Pull	Max. Space*	Min. Space	Max. Space*	Min.	Max.*
PBC24	24"	20¾"	DR2424	26¼"	¾"	27"	2¼"	3"	2¼"	3"
PBC24 BUTT	24"	20¾"	DR1224 BUTT (2)	26¼"	¾"	27"	2¼"	3"	2¼"	3"

Standard Overlay Door Styles

Wall Space A requirements include optional decorative hardware clearance.
1¼" may be deducted if decorative hardware is not used.

Cabinet	Actual Cabinet Width	Door Opening	Door(s)	Wall Space A			Exposed Frame B		Filler (at wall)	
				Min. Space	Max. Pull	Max. Space	Min. Space	Max. Space	Min.	Max.
PBC24	24"	20¾"	DR2424	25⅜"	1⅝"	27"	1⅜"	3"	1⅜"	3"
PBC24 BUTT	24"	20¾"	DR1224 BUTT (2)	25⅜"	1⅝"	27"	1⅜"	3"	1⅜"	3"

Base Easy Reach

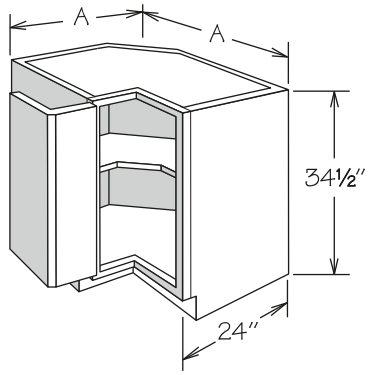

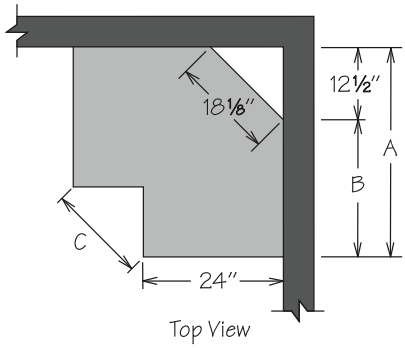

PORTFOLIO SELECT & POTFOLIO

AH
APC
FE
PE
VTK

- One adjustable half-depth shelf (non-removable)
- All door styles must be ordered hinged left or right
- BER33 features two solid recessed panel doors for Sierra Vista door style
- Features a solid top
- Sides are finished
- Stile width and outside profile of both doors at door-to-door hinge may vary from standard dimension and profile for proper door function
- Face frame will be notched for hinges on full overlay (FOL) door styles
- Doors open 170°
- Recommend a minimum of 32" to fit through doorway
- Additional space recommended if appliance is installed on the hinge side of this cabinet for proper door operation – decorative hardware should be taken into consideration for the overall depth of appliance

SHELF	A	B	C
BER33	33"	20½"	10 7/16"
BER36	36"	23½"	14⅝"

Asymmetrical Base Easy Reach

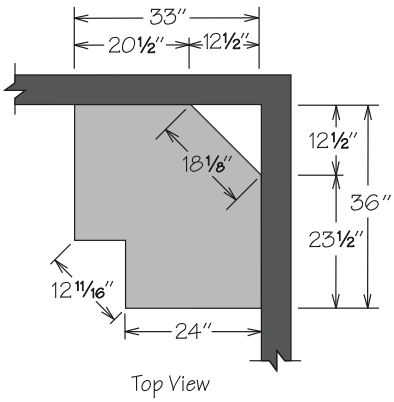

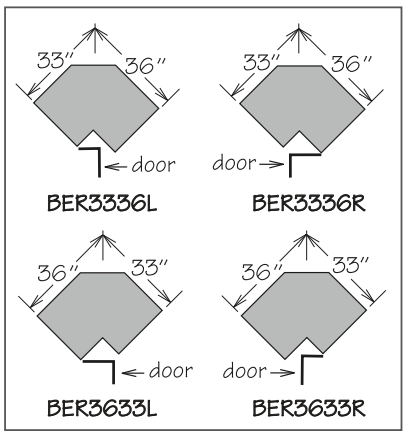

PORTFOLIO SELECT & POTFOLIO

AH
APC
FE
PE
VTK

- One adjustable half-depth shelf (non-removable)
- All door styles must be ordered hinged left or right
- Sierra Vista door style features one solid recessed panel door (33" side) and one solid raised panel door (36" side)
- Features a solid top
- Sides are finished
- Stile width and outside profile of both doors at door-to-door hinge may vary from standard dimension and profile for proper door function
- Face frame will be notched for hinges on full overlay (FOL) door styles
- Doors open 170°
- Recommend a minimum of 32" to fit through doorway
- Additional space recommended if appliance is installed on the hinge side of this cabinet for proper door operation – decorative hardware should be taken into consideration for the overall depth of appliance

SHELF
BER3336
BER3633

Base Super Susan · Spin Unit

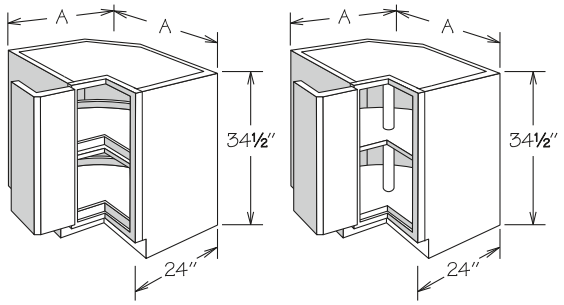

WOOD SPIN UNIT PLASTIC SPIN UNIT

PORTFOLIO SELECT & POTFOLIO

AH
APC
FE
PE
VTK

- All door styles must be ordered hinged left or right
- BSS33 features two solid recessed panel doors for Sierra Vista door style
- Features a solid top
- Sides are finished
- Stile width and outside profile of both doors at door-to-door hinge may vary from standard dimension and profile for proper door function
- Face frame will be notched for hinges on full overlay (FOL) door styles
- Doors open 170°
- Recommend a minimum of 32" to fit through doorway
- Additional space recommended if appliance is installed on the hinge side of this cabinet for proper door operation – decorative hardware should be taken into consideration for the overall depth of appliance
- Wood Spin Units feature:
  - » One fixed spin unit mounted on cabinet floor
  - » One spin unit attached to ¾" adjustable shelf
  - » Smooth-turning design spins freely — no lock to engage or release
  - » Natural wood finish with 1" lip
- Plastic Spin Units feature:
  - » Two spin shelves with pole (top shelf adjustable)
  - » White high strength plastic shelves

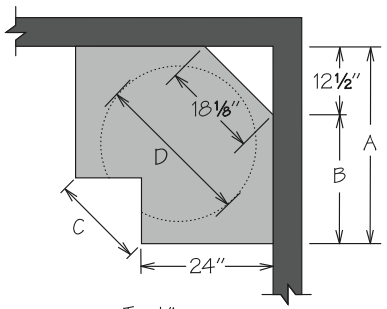

Top View

	A	B	C	D
Wood Spin Unit				
BSS33 WD	33"	20½"	10 7/16"	28"
BSS36 WD	36"	23½"	14 5/8"	32"
Plastic Spin Unit				
BSS33	33"	20½"	10 7/16"	28"
BSS36	36"	23½"	14 5/8"	32"

Asymmetrical Base Super Susan · Spin Unit

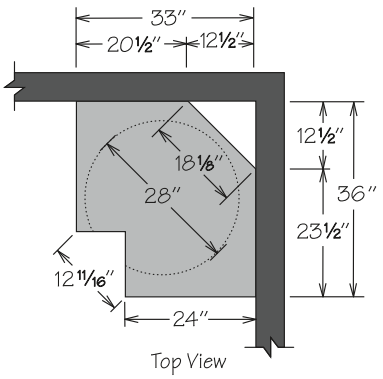

Top View

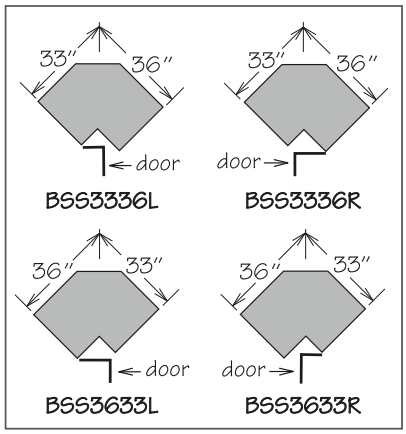

PORTFOLIO SELECT & POTFOLIO

AH
APC
FE
PE
VTK

- All door styles must be ordered hinged left or right
- Sierra Vista door style features one solid recessed panel door (33" side) and one solid raised panel door (36" side)
- Features a solid top
- Sides are finished
- Stile width and outside profile of both doors at door-to-door hinge may vary from standard dimension and profile for proper door function
- Face frame will be notched for hinges on full overlay (FOL) door styles
- Doors open 170°
- Recommend a minimum of 32" to fit through doorway
- Additional space recommended if appliance is installed on the hinge side of this cabinet for proper door operation – decorative hardware should be taken into consideration for the overall depth of appliance
- Wood Spin Units feature:
  - » One fixed spin unit mounted on cabinet floor
  - » One spin unit attached to ¾" adjustable shelf
  - » Smooth-turning design spins freely — no lock to engage or release
  - » Natural wood finish with 1"
- Plastic Spin Units features:
  - » Two spin shelves with pole (top shelf adjustable)
  - » White high strength plastic shelves

WOOD SPIN UNIT

BSS3336 WD
BSS3633 WD

PLASTIC SPIN UNIT

BSS3336
BSS3633

Corner Base Carousel · Spin Unit

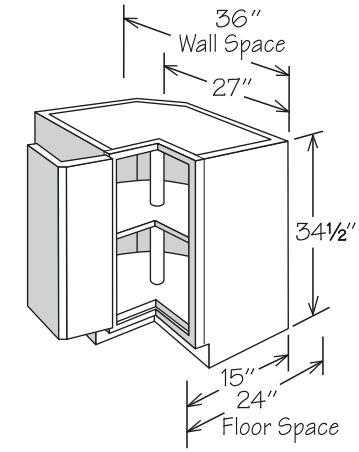

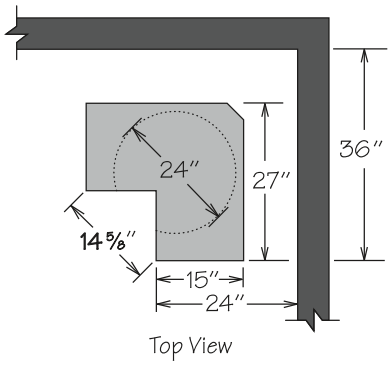

PORTFOLIO SELECT & POTFOLIO

AH
VTK

- All door styles must be ordered hinged left or right
- Features a solid top
- Sides are unfinished
- Stile width and outside profile of both doors at door-to-door hinge may vary from standard dimension and profile for proper door function
- Face frame will be notched for hinges on full overlay (FOL) door styles
- Doors open 170°
- If unit has an exposed side, order end panel separately
- Additional support for countertop in back is necessary
- Additional space recommended if appliance is installed on the hinge side of this cabinet for proper door operation – decorative hardware should be taken into consideration for the overall depth of appliance
- Unit must be pulled to install in a 36" x 36" space
- Wood Spin Units feature:
  - » Two natural finish solid hardwood spin shelves with pole (top shelf adjustable)
- Plastic Spin Units feature:
  - » Two white high strength plastic spin shelves with pole (top shelf adjustable)

WOOD SPIN UNIT
CAR36 WD

PLASTIC SPIN UNIT
CAR36

Corner Base · Spin Unit

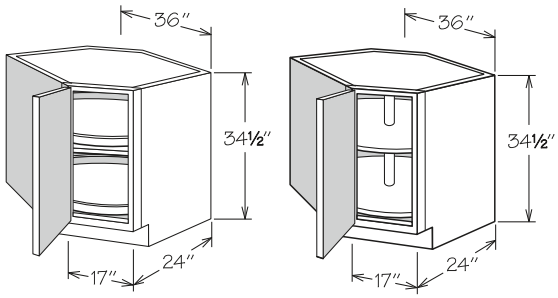

WOOD SPIN UNIT PLASTIC SPIN UNIT

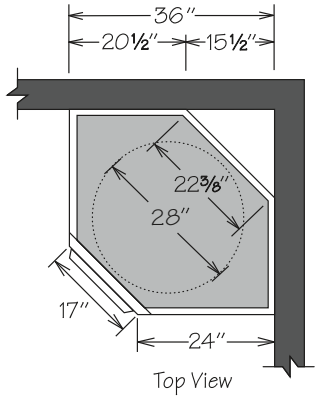

PORTFOLIO SELECT & POTFOLIO

AH
APC
CCH
FE
PE
VTK

- Sides are finished
- Cabinet requires a minimum of 34" to fit through doorway
  - » White high strength plastic shelves
- Additional space recommended if appliance is installed on the hinge side of this cabinet for proper door operation – decorative hardware should be taken into consideration for the overall depth of appliance
- Cabinet features solid top
- Wood Spin Units feature:
  - » One fixed spin unit mounted on cabinet floor
  - » One spin unit attached to ¾" adjustable shelf
  - » Smooth-turning design spins freely — no lock to engage or release
  - » Natural wood finish with 1" lip
- Plastic Spin Units feature:
  - » Two spin shelves with pole (top shelf adjustable)
- Hinged left and can be reversed in the field
- CCH option is available on Portfolio Series only

WOOD SPIN UNIT
CBS36 WD

PLASTIC SPIN UNIT
CBS36

Blind Corner Base

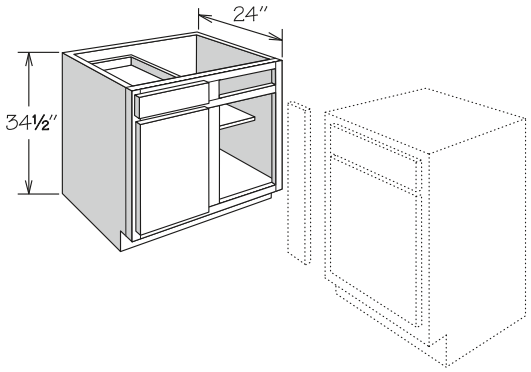

- Half-depth adjustable shelf
- Blind base door and drawer are installed in the left section
- Door and drawer can be reversed in the field as blind sections are identical
- Includes ⅛" panel to cover blind opening (field trim and install)
- Refer to the chart below for specifications
- Recessed Toe Kick Both Option (RTKB) available only
- Must order Universal Filler separately
- Center support for shelf provided (excluding BLB36/39 and BLB39/42)
- CCH and CCDW options are available on Portfolio Series only

PORTFOLIO SELECT & POTFOLIO	VALUE BUILT
AH	CFO
APC	FDS
CCH	RD
CCDW	RTK
CFO	VTK
FDS	
FE	
PE	
RD	
RTK	
VTK	

1 SHELF

BLB36/39
BLB39/42
BLB42/45
BLB45/48
BLB48/51

Full Height Blind Corner Base

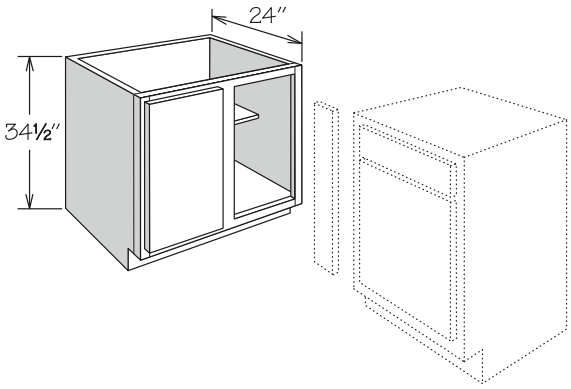

- Half-depth adjustable shelf
- Center support for shelf provided (excluding BLB36/39 FH and BLB39/42 FH)
- Blind base door is installed in the left section
- Door can be reversed in the field as blind sections are identical
- Includes ⅛″ panel to cover blind opening (field trim and install)
- Refer to the chart for specifications
- Recessed Toe Kick Both Option (RTKB) available only
- Must order Universal Filler separately
- CCH and CCDW options are available on Portfolio Series only

PORTFOLIO SELECT & POTFOLIO	VALUE BUILT
AH	FDS
APC	RD
CCH	VTK
CFO	
FDS	
FE	
PE	
RD	
RTK	
VTK	

1 SHELF

BLB36/39 FH
BLB39/42 FH
BLB42/45 FH
BLB45/48 FH
BLB48/51 FH

Blind Corner Base · Pull Out Kit

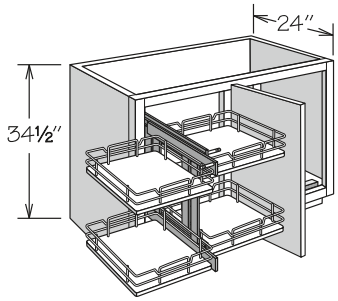

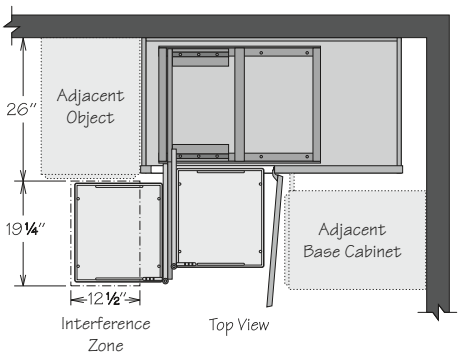

PORTFOLIO SELECT & POTFOLIO

AH
APC
CCH
FE
PE
RTK
VTK

- Cabinets indicated with an asterisk (*) are available for Portfolio Select and Portfolio only
- Full-height door
- Blind base door is installed in the left section
- Door and Pull Out Kit can be reversed in the field as blind sections are identical
- Includes ⅛" panel to cover blind opening (field trim and install)
- Refer to the Blind Corner Base Installation Chart for specifications
- Recessed Toe Kick Both Option (RTKB) available only
- Pull out kit:
  - » Features two-tiered organizer with four chrome finish wire shelves and engineered wood bottoms with woodgrain look
  - » Supports up to 27 pounds per front shelf and 34 pounds per shelf per back shelf
  - » Features full-extension, 100-pound rated glides
  - » Packaged separately for field installation
  - » Mounts to cabinet floor
- CCH option is available on Portfolio Series only
- Unit requires 19 ¼" of clearance in front of the cabinet to pull the unit out, and 12 ½" of side clearance to slide the unit over
- Baskets are able to be repositioned to allow clearance of deeper adjacent objects up to 26"

PULL OUT KIT

*BLB45/48 FH POK
*BLB48/51 FH POK

**N/A for Value Built*

Blind Corner Base · Swing Out Kit

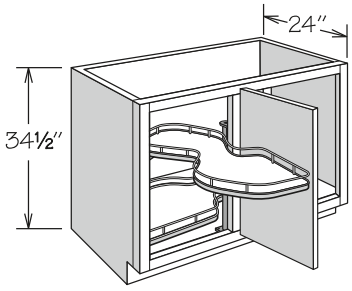

BLB45/48 FH SOKL Shown

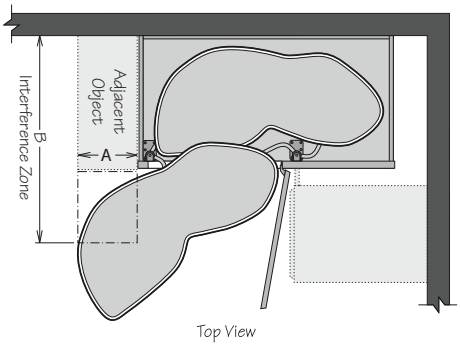

BLB45/48 FH SOKR Shown

PORTFOLIO SELECT & POTFOLIO

AH
APC
CCH
RTK
VTK

- Cabinets indicated with an asterisk (*) are available for Portfolio Select and Portfolio only
- Full-height door
- Features Furniture Ends standard
- Blind base door is installed in the left section
- Door can be reversed in the field as blind sections are identical, kit is not reversible and must be ordered as left or right
- Includes ⅛" panel to cover blind opening (field trim and install)
- Refer to the Blind Corner Base Installation Chart for specifications
- Recessed Toe Kick Both Option (RTKB) available only
- Pull out kit:
  - » Must be ordered left or right
  - » Features two-tiered organizer with two chrome finish wire shelves and engineered wood bottoms with woodgrain look
  - » Supports up to 55 pounds per shelf
  - » Packaged separately for field installation
  - » Mounts to cabinet side panel and telescopic pole (included)
- CCH option is available on Portfolio Series only

A (Distance from edge of BLB frame)	0"	3"	6"	9"	12"	13"
B (Maximum Depth of Adjacent Object)	24 7/8"	25 ½"	27 ½"	28 5/8"	32 ¼"	no interference

SWING OUT KIT

*BLB45/48 FH SOKL
*BLB45/48 FH SOKR
*BLB48/51 FH SOKL
*BLB48/51 FH SOKR

**N/A for Value Built*

BLIND CORNER BASE INSTALLATION CHART

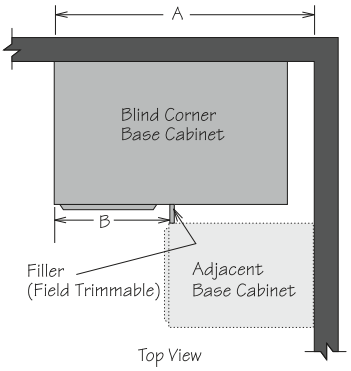

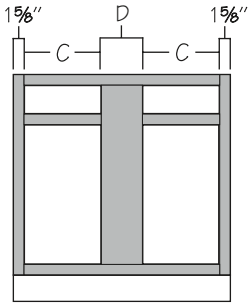

BLB36/39 - BLB45/48

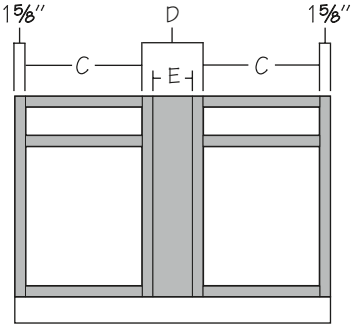

BLB45/48 FH, BLB48/51, BLB48/51 FH

Full Overlay Door Styles

Full Overlay door styles require decorative hardware, which has been calculated into dimensions.

*Dimension requirements do not include optional Overlay Fillers - add ⅞" if Overlay Fillers will be used, except for BLB48/51 add ⅛".

Cabinet	Actual Cabinet Width	Wall Space A			Exposed Frame B		C Door Opening	Door(s)	D	E
		Minimum Space*	Maximum Pull	Maximum Space	Minimum Space*	Maximum Space				
BLB36/39	27"	38¼"	1¾"	40"	14¼"	16"	8¾"	DR1224	6¼"	-
BLB36/39 FH	27"	38¼"	1¾"	40"	14¼"	16"	8¾"	DR12FH	6¼"	-
BLB39/42	33"	41¼"	1¾"	43"	17¼"	19"	11¾"	DR1524	6¼"	-
BLB39/42 FH	33"	41¼"	1¾"	43"	17¼"	19"	11¾"	DR15FH	6¼"	-
BLB42/45	39"	44¼"	1¾"	46"	20¼"	22"	14¾"	DR1824	6¼"	-
BLB42/45 FH	39"	44¼"	1¾"	46"	20¼"	22"	14¾"	DR18FH	6¼"	-
BLB45/48	45"	47¼"	1¾"	49"	23¼"	25"	17¾"	DR2124	6¼"	-
BLB45/48 FH	45"	47¼"	1¾"	49"	23¼"	25"	17¾"	DR21FH	6¼"	3"
BLB48/51	48"	48"	4"	52"	24"	28"	17¾"	DR2124	9¼"	6"
BLB48/51 FH	48"	48"	4"	52"	24"	28"	17¾"	DR21FH	9¼"	6"

Standard Overlay Door Styles

Wall Space A requirements include optional decorative hardware clearance.

1¼" may be deducted if decorative hardware is not used.

Cabinet	Actual Cabinet Width	Wall Space A			Exposed Frame B		C Door Opening	Door(s)	D	E
		Minimum Space	Maximum Pull	Maximum Space	Minimum Space	Maximum Space				
BLB36/39	27"	37⅜"	2⅝"	40"	13⅜"	16"	8¾"	DR1224	6¼"	-
BLB36/39 FH	27"	37⅜"	2⅝"	40"	13⅜"	16"	8¾"	DR1230	6¼"	-
BLB39/42	33"	40⅜"	2⅝"	43"	16⅜"	19"	11¾"	DR1524	6¼"	-
BLB39/42 FH	33"	40⅜"	2⅝"	43"	16⅜"	19"	11¾"	DR1530	6¼"	-
BLB42/45	39"	43⅜"	2⅝"	46"	19⅜"	22"	14¾"	DR1824	6¼"	-
BLB42/45 FH	39"	43⅜"	2⅝"	46"	19⅜"	22"	14¾"	DR1830	6¼"	-
BLB45/48	45"	46⅜"	2⅝"	49"	22⅜"	25"	17¾"	DR2124	6¼"	-
BLB45/48 FH	45"	46⅜"	2⅝"	49"	22⅜"	25"	17¾"	DR2130	6¼"	3"
BLB48/51	48"	48"	4"	52"	24"	28"	17¾"	DR2124	9¼"	6"
BLB48/51 FH	48"	48"	4"	52"	24"	28"	17¾"	DR2130	9¼"	6"

Corner Sink Base · 1 Door

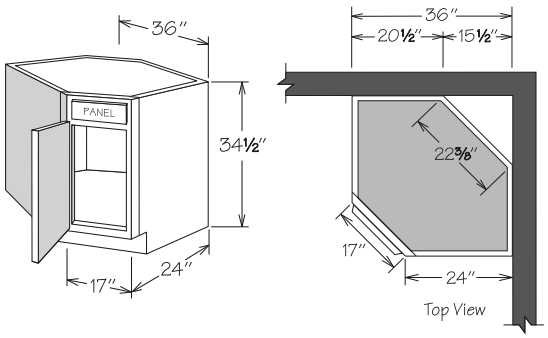

- No shelf
- Sides are finished
- Cabinet requires a minimum of 34" to fit through doorway
- Additional space recommended if appliance is installed on either side of this cabinet for proper appliance door operation
- Cabinet features solid top which must be field cut for sink installation as per manufacturer's specifications
- Maximum sink width is 22¾" if cut out is 4" back from face of front frame
- Refer to sink manufacturer's specifications for adequate clearance and required installation materials
- Hinged left and can be reversed in the field
- Touch Up Kit included
- CCH option is available on Portfolio Series only

PORTFOLIO SELECT & POTFOLIO
AH
APC
CCH
FE
PE
VTK

CSB36

Deep Sink/Range Base · 2 Butt Doors

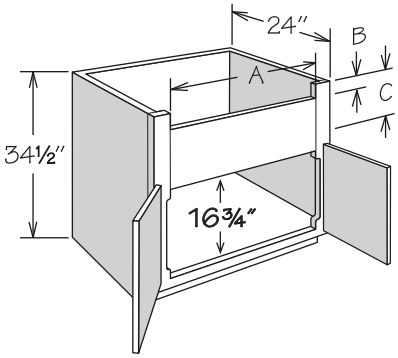

- No shelf
- Accommodates farm sinks
- Apron stiles are 3⅛" wide and trimmable
- A cutout exists in the door area where the 3⅛" stiles are routed to 1⅝"
- Refer to sink or appliance manufacturer's specifications for adequate clearance and required installation materials
- Touch Up Kit included
- CCH option is available on Portfolio Series only

PORTFOLIO SELECT & POTFOLIO	VALUE BUILT
AH	RD
APC	RTK
CCH	VTK
FE	
PE	
RD	
RTK	
VTK	

	A-MIN.	A-MAX.	B	C-FOL	C-SOL
DSB30 BUTT	23¾"	28"	2⅞"	10"	10½"
DSB33 BUTT	26¾"	31"	2⅞"	10"	10½"
DSB36 BUTT	29¾"	34"	2⅞"	10"	10½"

Deep Sink/Range Base · 2 Doors

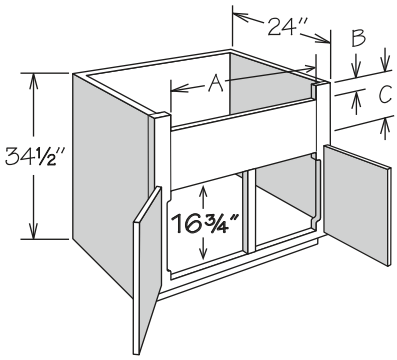

- No shelf
- Accommodates farm sinks
- Apron stiles are 3⅛" wide and trimmable
- A cutout exists in the door area where the 3⅛" stiles are routed to 1⅝"
- Refer to sink or appliance manufacturer's specifications for adequate clearance and required installation materials
- Touch Up Kit included
- CCH option is available on Portfolio Series only

PORTFOLIO SELECT & POTFOLIO	VALUE BUILT
AH	RD
APC	RTK
CCH	VTK
FE	
PE	
RD	
RTK	
VTK	

	A-MIN.	A-MAX.	B	C-FOL	C-SOL
DSB39	32¾"	37"	2⅞"	10"	10½"

Sink/Cooktop Base

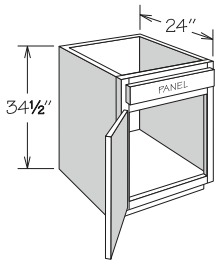

1 DOOR

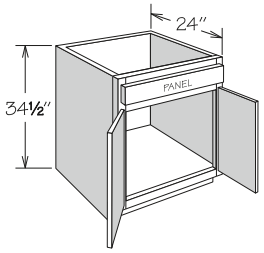

2 BUTT DOORS

- No shelf
- Full-height back
- Subtract 1½" from width and depth for available sink bowl opening
- Refer to sink or appliance manufacturer's specifications for adequate clearance and required installation materials
- Touch Up Kit included
- Single door cabinets are hinged left and can be reversed in the field
- CCH option is available on Portfolio Series only

PORTFOLIO SELECT & POTFOLIO	VALUE BUILT
AH	RD
APC	RTK
CCH	VTK
FE	
PE	
RD	
RTK	
VTK	

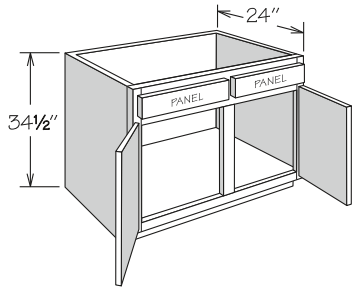

2 DOORS

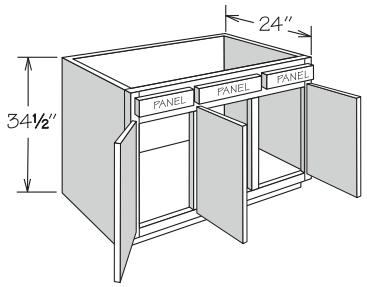

3 DOORS

1 DOOR
SB18
SB21
SB24

2 BUTT DOORS
SB24 BUTT
SB27 BUTT
SB30 BUTT
SB33 BUTT
SB36 BUTT

2 DOORS
SB39
SB42
SB48

3 DOORS
SB45

Sink Base · 1 Sink Base Mat

NEW! PRODUCT

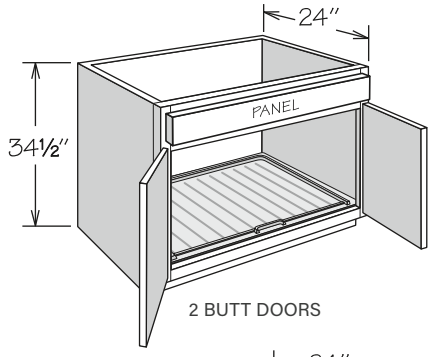

2 BUTT DOORS

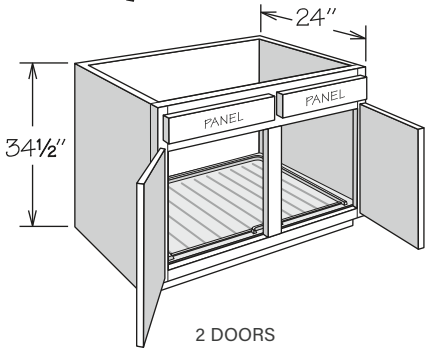

2 DOORS

- No shelf
- Full-height back
- Subtract 1 ½" from width and depth for available sink bowl opening
- Refer to sink or appliance manufacturer's specifications for adequate clearance and required installation materials
- Touch Up Kit included
- Sink Base Mat is shipped separately for field installation
- Sink Base Mat for SB39 is notched for center stile

AH
APC
FE
RTK
VTK

2 BUTT DOORS
SB30 BUTT SBMAT
SB33 BUTT SBMAT
SB36 BUTT SBMAT

2 DOORS
SB39 SBMAT

Sink Base · Stainless Tilt-Out Tray(s)

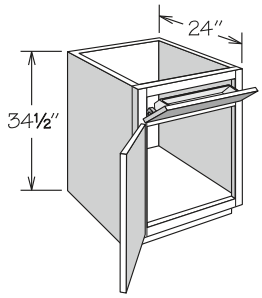

1 DOOR

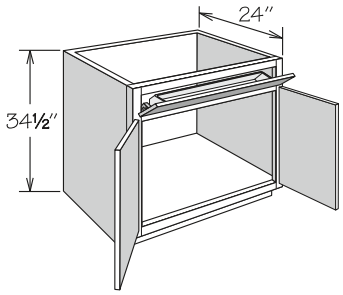

2 BUTT DOORS

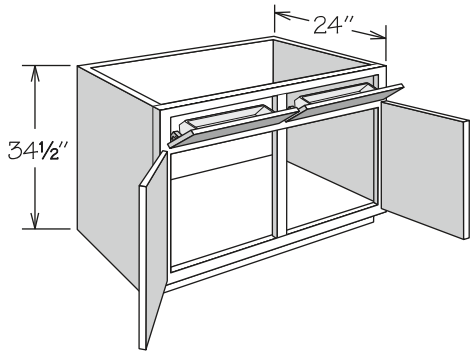

2 DOORS

- No shelf
- Full-height back
- Subtract 1½" from width and 3¾" from depth for available sink bowl opening
- Tilt-Out Trays are NOT dishwasher safe
- Refer to sink manufacturer's specifications for adequate clearance and required installation materials
- Touch Up Kit included
- Single door cabinets are hinged left and can be reversed in the field
- CCH option is available on Portfolio Series only

PORTFOLIO SELECT & POTFOLIO	VALUE BUILT
AH	RD
APC	RTK
CCH	VTK
FE	
PE	
RD	
RTK	
VTK	

1 DOOR

SB21 STO
SB24 STO

2 DOORS

SB39 STO
SB42 STO
SB48 STO

2 BUTT DOORS

SB24 BUTT STO
SB27 BUTT STO
SB30 BUTT STO
SB33 BUTT STO
SB36 BUTT STO

Sink Base · 1 Sink Base Mat and Tilt-Out Tray(s) **NEW!** PRODUCT

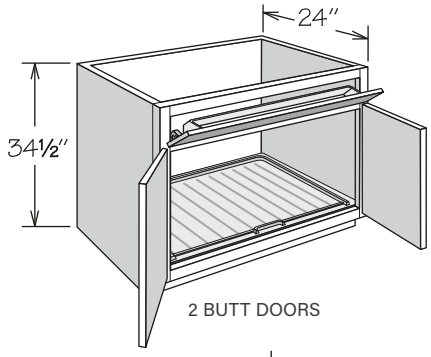

2 BUTT DOORS

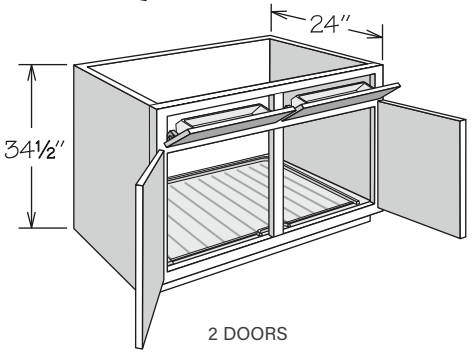

2 DOORS

- No shelf
- Full-height back
- Subtract 1 1/2" from width and depth for available sink bowl opening
- Tilt-out Trays are NOT dishwasher safe
- Refer to sink manufacturer's specifications for adequate clearance and required installation materials
- Touch Up Kit included
- Sink Base Mat is shipped separately for field installation
- Sink Base Mat for SB39 is notched for center stile

PORTFOLIO SELECT & POTFOLIO	VALUE BUILT
AH	RTK
APC	VTK
CCH	
FE	
PE	
RTK	
VTK	

2 BUTT DOORS

SB30 BUTT STO SBMAT
SB33 BUTT STO SBMAT
SB36 BUTT STO SBMAT

2 DOORS

SB39 STO SBMAT

Sink Base Multi-Storage Cabinet

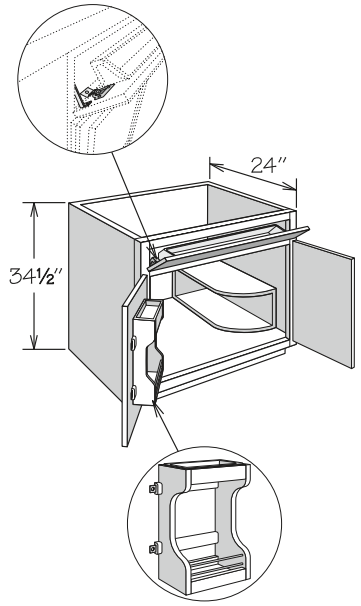

PORTFOLIO SELECT & POTFOLIO	VALUE BUILT
AH	RTK
APC	VTK
CCH	
FE	
PE	
RTK	
VTK	

- UPDATE: Cabinet features:
  - » Factory installed Sink Base Door Storage Unit
  - » One Stainless Tilt-Out Tray
  - » Sink Base Multi-Storage Shelf (SBMSS) shipped separately for field installation left or right
- Sink Base Multi-Storage Shelf measures 8 1⁄16" wide x 8" high x 17½" deep
- Full-height back
- Subtract 1½" from width and 3¾" from depth for available sink bowl opening
- Tilt-Out Trays and Door Storage Unit trays are NOT dishwasher safe
- Refer to sink manufacturer's specifications for adequate clearance and required installation materials
- Touch Up Kit included

2 BUTT DOORS

SBMSC30 BUTT STO
SBMSC36 BUTT STO

Sink Base · Base Plumbing Skirt

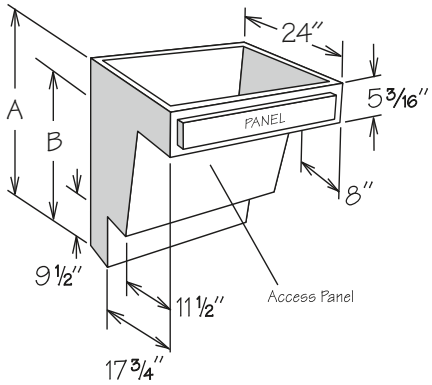

PORTFOLIO SELECT & POTFOLIO
APC
FE

- Features kneehole drawer front - refer to door style section
- Cabinets indicated with an asterisk (*) are available for Portfolio Select and Portfolio only
- Features plywood sides
- Removable front access panel attached with 4 sets of DDF Fasteners (DDF FASTENER qty 2)
- Subtract 1½" from width and depth for available sink bowl opening
- Maximum available height inside cabinet for sink bowl is 5"
- Water lines, drains, and P-Trap must be installed at 6" maximum from wall
- Refer to sink manufacturer's specifications for adequate clearance and required installation materials
- Matching toe kick included
- Must be installed between two cabinets or a cabinet and a wall
- May be used with Adaptable Sink Base Kit (ASB) - order separately

	A	B
32½" High		
*BPS30 UD	32½"	27 7⁄16"
*BPS36 UD	32½"	27 7⁄16"
34½" High		
*BPS3034 UD	34½"	29 7⁄16"
*BPS3634 UD	34½"	29 7⁄16"

N/A for Value Built

Adaptable Sink Base Kit

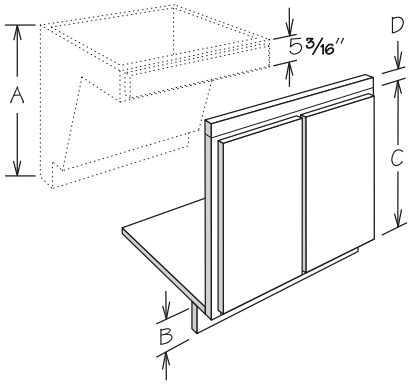

- Cabinets indicated with an asterisk (*) are available for Portfolio Select and Portfolio only
- For use with Base Plumbing Skirt (BPS) - MUST be ordered separately
- Kit contains:
  - » Face frame with hinged butt doors
  - » One Tall Filler (S3S396)
  - » Four Drawer Fasteners (DDF FASTENER)
  - » One Sink Floor (FL36)
  - » One Hardwood Cleat (HWC 2X4X96)
  - » Installation instructions
- Features CushionClose hinges standard for all door styles
- Kit must be assembled in the field

A BPS	B DESIRED TOE KICK HEIGHT	C FACE FRAME HEIGHT	D S3S TRIMMED	KIT
32½"	2"	24½"	13/16"	ASB_34 KIT
32½"	4"	20 5/8"	2 11/16"	ASB_32 KIT
34½"	4"	24½"	13/16"	ASB_34 KIT

20 5/8" Frame

*ASB3032 KIT

*ASB3632 KIT

**N/A for Value Built*

24 ½" Frame

*ASB3034 KIT

*ASB3634 KIT

**N/A for Value Built*

Sink/Cooktop Front

PORTFOLIO SELECT & POTFOLIO: CCH

- SF45 is hinged as shown – can be reversed in the field
- Order floor and returns separately (field trimming may be required) – refer to Panel Section for availability (page 173)
- CCH option is available on Portfolio Series only

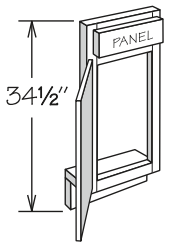

1 DOOR

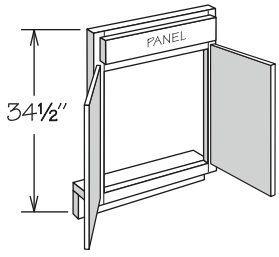

2 BUTT DOORS

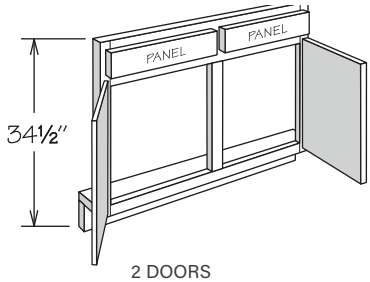

2 DOORS

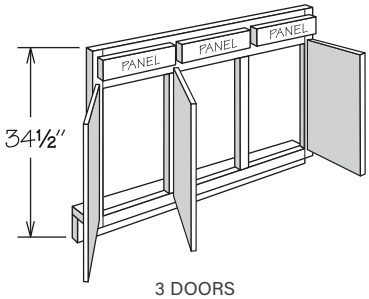

3 DOORS

1 DOOR

SF12
SF15
SF18
SF21
SF24

2 BUTT DOORS

SF24 BUTT
SF27 BUTT
SF30 BUTT
SF33 BUTT
SF36 BUTT

2 DOORS

SF39
SF42
SF48

3 DOORS

SF45

Corner Sink Front

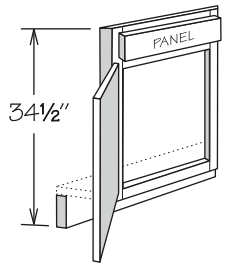

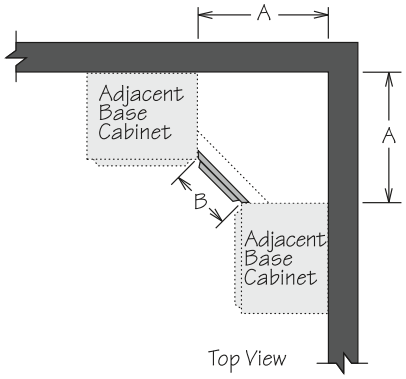

PORTFOLIO SELECT & POTFOLIO

CCH

- Vertical edges of frame are mitered to attach to adjacent cabinet frames
- Order floor and returns separately (field trimming may be required) – refer to Panel Section for availability (page 173)
- CCH option is available on Portfolio Series only
- Filler not required for installation

	A	B
CSF36	35 31/32"	16 15/16"
CSF42	42 11/32"	25 15/16"

Base Spice Drawer Cabinet

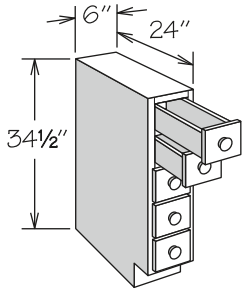

- All door styles feature veneered engineered wood with exterior only finished to match cabinet box exterior
- Five individual full-depth drawers without glides
- Flush sides with no face frame or ¼" reveals
- All wood drawer body with dovetail construction
- Wood door styles feature matching wood knobs
- Linen, Pewter, and White door styles feature white porcelain knobs
- Features ½" thick slab drawer fronts for all door styles

BSDC6

Base Wine Rack Cabinet

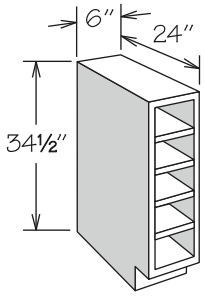

- All door styles feature veneered engineered wood finished to match cabinet box exterior
- Interior finished to match cabinet box exterior
- Accommodates five wine bottles (each opening measures: 5" high x 4 ½" wide)
- ¾" sides and shelves
- Flush sides with no face frame or ¼" reveals
- Cannot be retrofitted with Base Spice drawers

BWRC6

Base End Angle · 1 Door

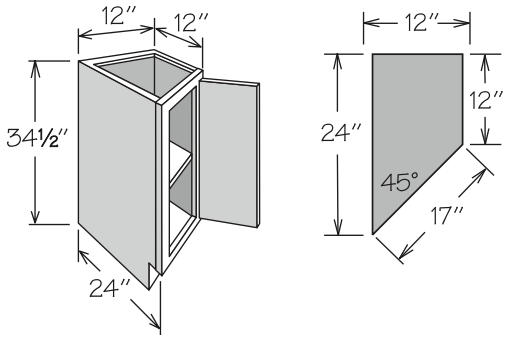

BEA12R FH is shown

- Full-height door
- One adjustable shelf
- Only available with RD-23 through RD-18
- Recessed Toe Kick Option (RTK) only available on 12" side
- Cabinet dimensions are for reference purposes ONLY – countertop must be measured and fabricated after cabinet installation
- CCH option is available on Portfolio Series only

PORTFOLIO SELECT & POTFOLIO	VALUE BUILT
APC	RD
CCH	RTK
FE	VTK
PE	
RD	
RTK	
VTK	

BEA12L FH
BEA12R FH

Base End Angle · 2 Doors

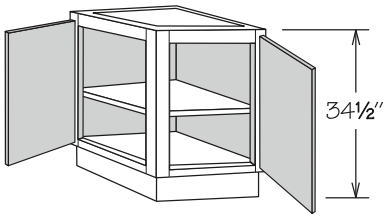

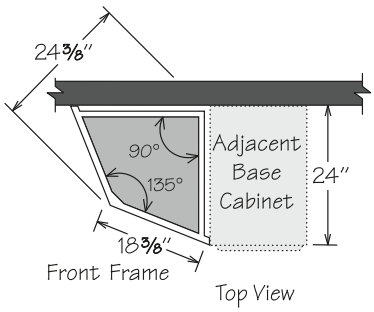

- Features a solid top
- One adjustable shelf
- Requires 24" x 24" space
- Cabinet dimensions are for reference purposes ONLY – countertop must be measured and fabricated after cabinet installation
- CCH options is available on Portfolio Series only

PORTFOLIO SELECT & POTFOLIO	VALUE BUILT
APC	VTK
CCH	
PE	
VTK	

BEA24 FH

Base Microwave Cabinet · 2 Drawers

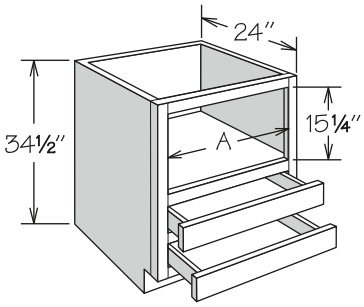

- Microwave opening finished to match cabinet box exterior
- Designed to accommodate countertop style microwave
- Features two standard depth drawers
- Accent molding recommended (order separately)
- Refer to appliance manufacturer's specifications for adequate clearances
- CCDW option is available on Portfolio Series only

PORTFOLIO SELECT & POTFOLIO	VALUE BUILT
AH	RD
APC	RTK
CCDW	VTK
FE	
PE	
RD	
RTK	
VTK	

	A
BMC24	20 ¾"
BMC27	23 ¾"
BMC30	26 ¾"

Built-In Base Microwave Cabinet

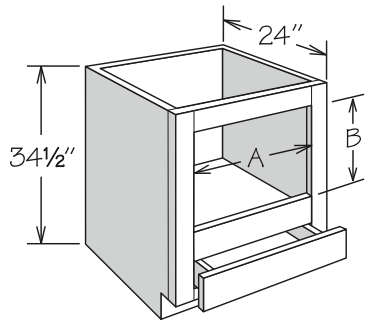

- Designed to accommodate built-in style microwaves with trim kit
- Features one standard depth drawer
- 3 ¼" top rail is field trimmable
- 3 ⅛" stiles
- Refer to appliance manufacturer's specifications for adequate clearances and required installation materials

PORTFOLIO SELECT & POTFOLIO	VALUE BUILT
AH	RD
APC	RTK
FE	VTK
PE	
RD	
RTK	
VTK	

	A-MIN.	A-MAX.	B-MIN.	B-MAX.
BBMC24	17¾"	22"	15⅝"	21⅛"
BBMC27	20¾"	25"	15⅝"	21⅛"
BBMC30	23¾"	28"	15⅝"	21⅛"

Base Filler Pull-Out

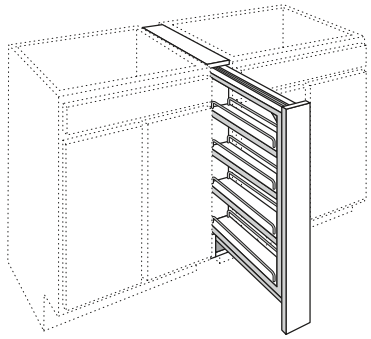

- Features full-extension CushionClose glides
- Cabinets indicated with an asterisk (*) are available for Portfolio Select and Portfolio Series only
- Must be installed between two base cabinets behind the face frames in 3" (BFP3) or 6" (BFP6) of floor space
- Cannot be installed next to an appliance or at the end of a run
- No side panels or toe kick
- Filler shipped unattached for field installation
- An overlay filler is recommended for full overlay door styles (order separately)
- Two fixed and two adjustable wood shelves with chrome rails
- Decorative hardware strongly recommended

	SHELF WIDTH
*BFP3 CC	2⅛"
*BFP6 CC	5⅛"

N/A for Value Built

Base Oven Cabinet Universal

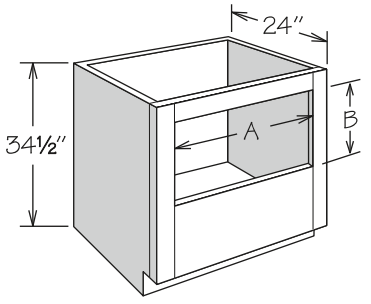

- Designed for mounting single oven below countertop
- 3" top rail is field removable and field trimmable
- 3⅛" stiles
- Will accommodate certain cooktops (in conjunction with under-counter oven) or drop-in ranges
- Most ovens require a top rail of varying heights to create a finished look and clear the countertop overhang
- Refer to appliance manufacturer's specifications for adequate clearances and required installation materials

PORTFOLIO SELECT & POTFOLIO	VALUE BUILT
AH	RD
APC	RTK
FE	VTK
PE	
RD	
RTK	
VTK	

	A-MIN.	A-MAX.	B-MIN.	B-MAX.*
BOCU27	20¾"	24 15/16"	18¼"	29"
BOCU30	23¾"	27 15/16"	18¼"	29"
BOCU33	26¾"	30 15/16"	18¼"	29"

*Trimming/removal of top rail required

Wood Tiered Cutlery Divider Kit

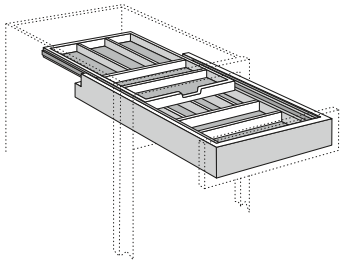

18" Wide Shown

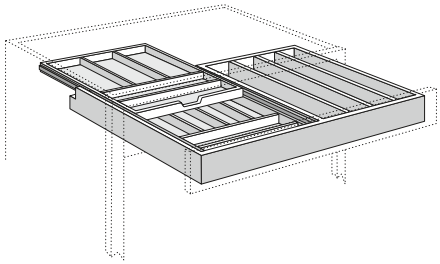

30" Wide Shown

- Accessories indicated with an asterisk (*) are available for Portfolio Select and Portfolio only
- Available as factory installed for Portfolio Select and Portfolio only
- Dovetail CushionClose Drawer upgrade required for Portfolio door styles
- Field installed accessory replaces existing drawer box
- Glides are NOT included — reuse existing drawer glides
- Solid hardwood and plywood in natural finish
- Double-tiered cutlery divider slides independently from drawer
- Can be installed in cabinets with single drawer or side-by-side drawer configurations
- Not sized to fit cabinets with Reduced Depth Option

WIDTH	UPPER SECTIONS	LOWER SECTIONS	COOKING UTENSIL SECTIONS
*WTCDKFD15	5	5	-
*WTCDKFD18	5	6	-
*WTCDKFD21	6	7	-
*WTCDKFD24	7	7	-
*WTCDKFD30	5	5	4
*WTCDKFD36	5	5	5

**N/A for Value Built*

Cutlery Divider Kit

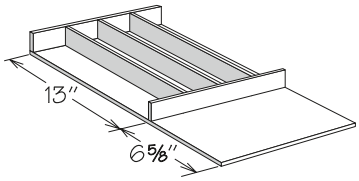

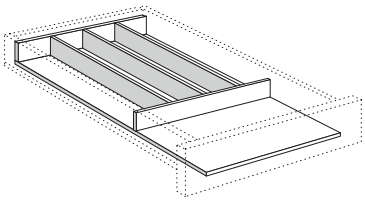

- Available as factory installed for Portfolio Select and Portfolio only
- Field installation accessory
- Solid hardwood and plywood in natural finish
- Sized to fit in a dovetail drawer box or field trim to fit drawers with side-mounted glides
- Not sized to fit cabinets with Reduced Depth Option

	NUMBER OF SECTIONS	WIDTH
CDAK15	4	9 3/4"
CDAK18	5	12 3/4"
CDAK21	6	15 3/4"
CDAK24	6	18 3/4"
CDAK30	7	24 3/4"
CDAK36	8	30 3/4"

Spice Drawer Insert Kit

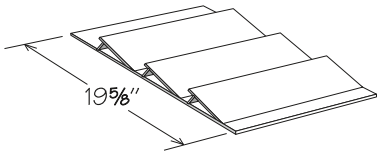

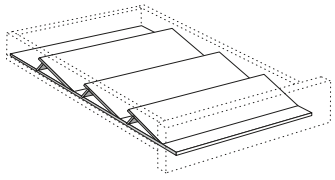

- Available as factory installed for Portfolio Select and Portfolio only
- Field installation accessory
- Solid hardwood and plywood in natural finish
- Accommodates most spice containers (not included)
- Sized to fit in a dovetail drawer box or field trim to fit drawers with side-mounted glides
- Not sized to fit cabinets with Reduced Depth Option

	WIDTH
SDIAK15	9 3/4"
SDIAK18	12 3/4"
SDIAK21	15 3/4"
SDIAK24	18 3/4"

Knife Block Drawer Insert Kit

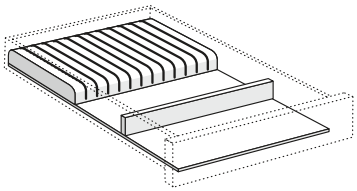

- Accessories indicated with as asterisk (*) are available for Portfolio Select and Portfolio Series only
- Sized to fit in a dovetail drawer box or field trim to fit drawers with side-mounted glides
- Field installation accessory
- Solid hardwood in natural finish
- Not sized to fit cabinets with Reduced Depth Option

	NUMBER OF KNIFE SLOTS	WIDTH
*KBDIK15	10	9 3/4"
*KBDIK18	13	12 3/4"
*KBDIK21	16	15 3/4"
*KBDIK24	19	18 3/4"

N/A for Value Built

Adjustable Drawer Divider Kit

NEW! SIZES

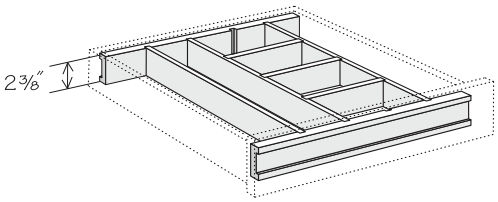

Standard Drawer Kit

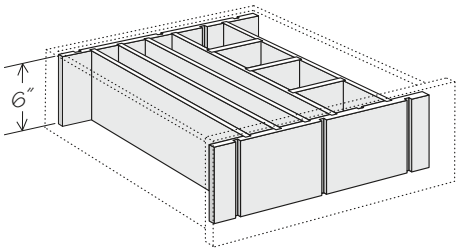

Large Drawer Kit

- Accessories indicated with as asterisk (*) are available for Portfolio Select and Portfolio Series only
- Standard Drawer Kits are used on upgraded CushionClose Dovetail Drawers (CCDW) and can be field trimmed in width and depth to accommodate 15" - 36" wide drawers and cabinets with the Reduced Depth Option
- Large Drawer Kits are used on upgraded CushionClose Dovetail Drawers (CCDW) and can be field trimmed in width and depth to accommodate 15" - 36" wide drawers and cabinets with the Reduced Depth Option
- Kit includes:
  - » Front and back panels with grooves
  - » Vertical dividers - two are grooved to accept horizontal dividers
  - » Horizontal dividers
  - » Installation screws

	NUMBER OF VERTICAL DIVIDERS	NUMBER OF HORIZONTAL DIVIDERS
Standard Drawer Kit		
***ADIK15/18**	4	3
***ADIK21/24**	4	3
***ADIK27/30**	5	3
***ADIK33/36**	9	3
*N/A for Value Built		
Large Drawer Kit		
*ADDIK21/24	4	3
*ADDIK27/30	5	3
*ADDIK33/36	6	3
*N/A for Value Built		

Drawer Work Surface

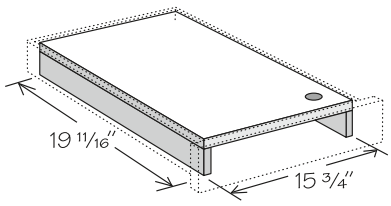

- Accessories indicated with as asterisk (*) are available for Portfolio Select and Portfolio Series only
- Sized to fit in a 21" wide dovetail drawer box or field trim to fit drawers with side-mounted glides
- Field installation accessory
- Work surface only - not to be used as a cutting board
- Workboard sits on two wooden supports to flush out top of drawer
- Not sized to fit cabinets with Reduced Depth Option

*DWS21
*N/A for Value Built

Sliding Shelf Kit

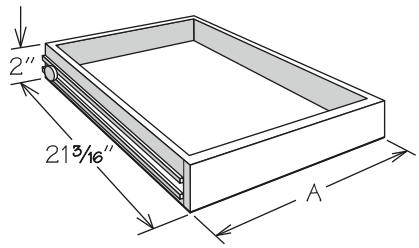

PORTFOLIO SELECT & POTFOLIO: CCSS, RD

VALUE BUILT: RD

- Field installation accessory
- Engineered wood drawer with solid hardwood front, MDF bottom, and side-mounted drawer glides
- Includes sliding shelf, all glide hardware and instructions
- SSKs can be used with all single and double door base cabinets
- SSK drill template is required for all double door cabinets that have fixed center stile – contact Customer Care for drill template

SLIDING SHELF KIT	A
SSK12	8½"
SSK15	11½"
SSK18	14½"
SSK19	16"
SSK21	17½"
SSK24	20½"
SSK27	23½"
SSK30	26½"
SSK33	29½"
SSK36	32½"

4 PACK SLIDING SHELF KIT	A
USS12-4K	8½"
USS15-4K	11½"
USS18-4K	14½"
USS21-4K	17½"
USS24-4K	20½"
USS27-4K	23½"
USS30-4K	26½"
USS33-4K	29½"
USS36-4K	32½"

Base Pot & Pan Organizer Kit

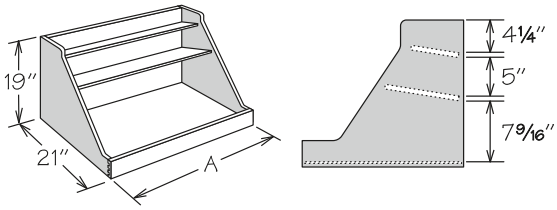

- Base Pot & Pan Organizer now features CushionClose glides
- Accessories indicated with an asterisk (*) are available for Portfolio Select and Portfolio Series only
- Field installation accessory
- Natural finish solid wood and wood veneer with dovetail (front only) construction and full-extension CushionClose glides
- Top shelf of organizer measures 6 3/16" deep
- Middle shelf of organizer measures 9¾" deep
- Not sized to fit reduced depth cabinets

	A	BASE CABINET SIZE	OVEN CABINET SIZE
*BPPOKCC24	19¾"	24"	27"
*BPPOKCC27	22¾"	27"	30"
*BPPOKCC30	25¾"	30"	33"
*BPPOKCC33	28¾"	33"	—
*BPPOKCC36	31¾"	36"	—

*N/A for Value Built

Roll-Out Tray Divider Kit

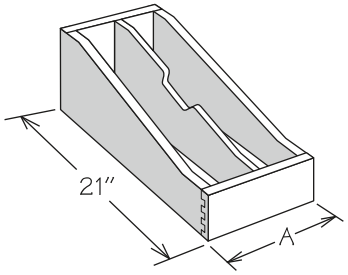

- Roll-Out Tray Divider now features CushionClose glides
- Accessories indicated with an asterisk (*) are available for Portfolio Select and Portfolio Series only
- Field installation accessory
- Natural finish solid wood and wood veneer with dovetail (front only) construction and full-extension drawer glides
- ROTDK12 features two compartments (one partition)
- ROTDK15 features three compartments (two partitions)
- Partition(s) are field installed
- Not sized to fit reduced depth cabinets

	A	CABINET SIZE
*ROTDKCC12	7¾"	12"
*ROTDKCC15	10¾"	15"

*N/A for Value Built

Base Mixer Lift Kit

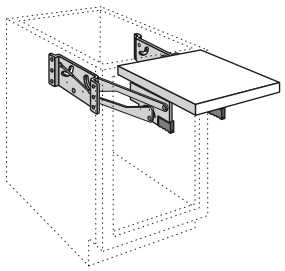

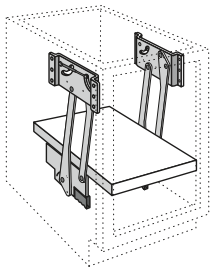

- Accessories indicated with as asterisk (*) are available for Portfolio Select and Portfolio Series only
- Field installation accessory
- Includes 1 ⅜" thick natural finish solid wood shelf and one pair of shock dampening, adjustable tension lifts
- Cannot be used with Sliding Shelf or adjustable shelf
- Supports up to 60 pounds
- For use with B18 FH with the Furniture Ends Option
- Mounts to cabinet side panels
- Not sized to fit cabinets with Reduced Depth Option

*BMLK18
*N/A for Value Built

Blind Base Pull Out Kit

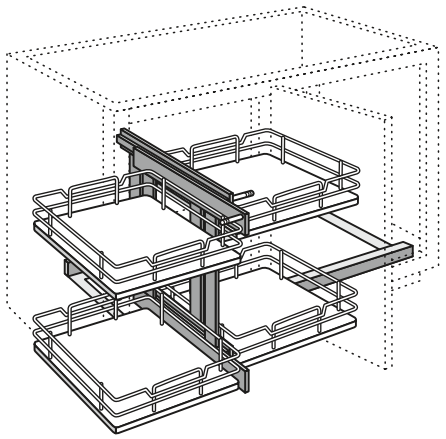

- Accessories indicated with as asterisk (*) are available for Portfolio Select and Portfolio Series only
- Field installation accessory
- Can be reversed for left or right installation
- Two-tiered organizer features four chrome finish wire shelves with engineered wood bottoms with woodgrain look
- Features full-extension 100-pound rated glides
- For use with BLB45/48 FH or BLB48/51 FH with the Furniture Ends Option
- Not sized to fit cabinets with Reduced Depth Option
- Unit requires 19 1/4" of clearance in front of cabinet to pull the unit out, and 12 1/2" of side clearance to slide the unit over (see page 103 for more details)
- Baskets are able to be repositioned to allow clearance of deeper adjacent objects up to 26"

*BLBPOK45
*N/A for Value Built

Blind Base Swing Out Kit

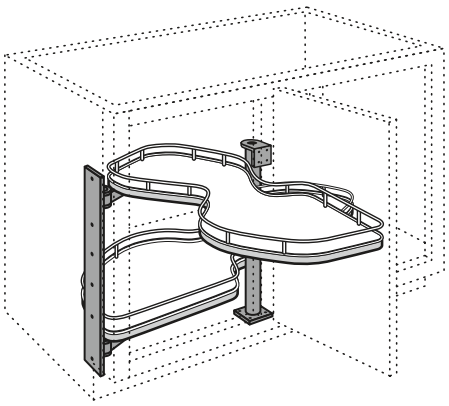

- Kit is not reversible and must be ordered as left or right - BLB_ L uses a BLBSOK45R and a BLB_ R uses a BLBSOK45L
- Accessories indicated with as asterisk (*) are available for Portfolio Select and Portfolio Series only
- Kit is not reversible and must be ordered as left or right
- Field installation accessory
- Two-tiered organizer features two chrome finish wire shelves with engineered wood bottoms with woodgrain look
- Supports up to 45 pounds per shelf
- Mounts to cabinet side panel and telescopic pole (included)
- Not sized to fit cabinets with Reduced Depth Option
  Recommended for use with BLB45/48 FH or BLB48/51 FH, can also be used with BLB45/48 or BLB48/51 - Furniture End Option required
- Refer to page 103 for shelf clearances

*BLBSOK45L
*BLBSOK45R
*N/A for Value Built

Cleaning Caddy Pullout Kit

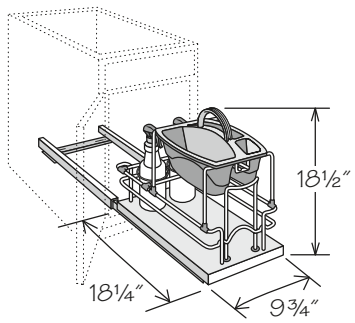

- Features metal and wire CushionClose pull-out organizer with two 1L spray bottles and one removable gray cleaning caddy
- Unit is configurable so that spray bottles can be installed at the front or back
- Supports up to 75 pounds
- For use with 15" or wider base cabinet
- Mounts to cabinet floor
- For use in 24" deep base cabinets, 21" deep vanity cabinets or cabinets with RD-23 through RD-20

CCPOK

Sink Base Mat

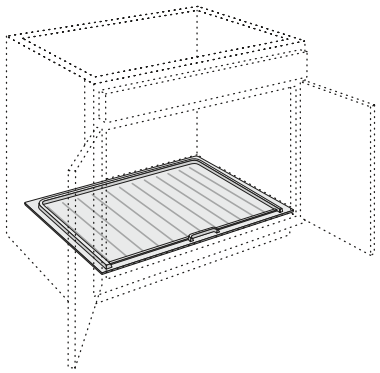

- Field installation accessory
- Designed to funnel any leaks or spills out the front of the cabinet while protecting the cabinet floor
- Features flexible material in gray finish - easily trimmable
- Minor field trimming required for use in Deep Sink Base cabinets
- Not sized or trimmable to fit cabinets with Reduced Depth Option
- SBMAT39 is notched for center stile

SBMAT30
SBMAT33
SBMAT36
SBMAT39

Sink Base Multi-Storage Shelf

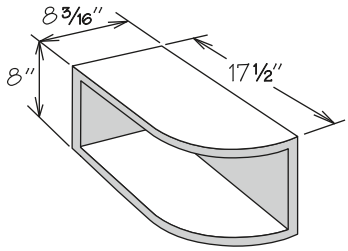

- Field installation accessory
- ¾" plywood with natural finish
- Invert for left or right installation

SBMSS

Cabinet Tray Divider

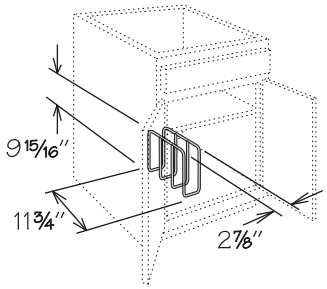

- Field installation accessory
- Chrome finish
- For use in 24" deep cabinets or cabinets with RD-23 through RD-14
- Mounting hardware included

TD3

Sink Base Door Storage Unit

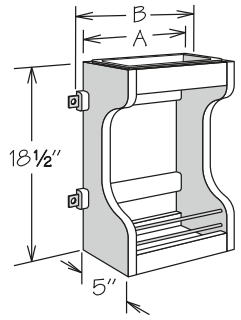

- Field installation accessory
- Natural finish solid wood
- Two fixed shelves
- Cannot be used with sliding shelves
- Full-depth shelf must be field trimmed to half-depth
- Removable white plastic tray is NOT dishwasher safe
- SBDSU15 mounts to 15" or 16" wide base door
- SBDSU18 mounts to 18" or 19" wide base door
- Not sized to fit Deep Sink Base (DSB) cabinet doors

	A	B
SBDSU15	9"	10½"
SBDSU18	10½"	13½"

Heat Shield Kit

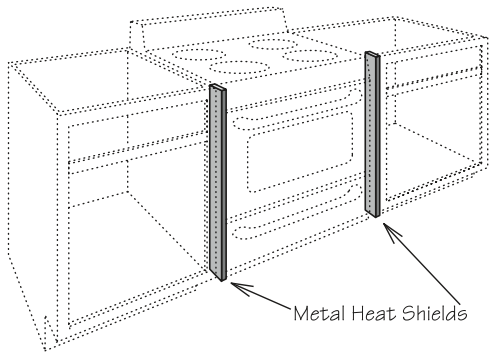

- Field installation accessory
- Recommended for Beckley and Canton Thermofoil door styles
- Protects doors and drawer fronts from adjacent heat source (built-in ovens, under counter ovens, drop-in, or free-standing ranges)
- Kit features: two 1/16" metal heat shields finished to match cabinet box exterior, one strip of QM8 (not required for base installation)

HSK

Stainless Tilt-Out Tray Kit

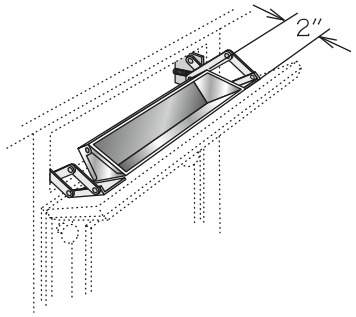

- Field installation accessory
- Kit features tray and one pair of scissor hinges
- Order units individually
- STO TRAY 11:
  - » Order one unit for SB18
- STO TRAY 14:
  - » Order one unit for SB21, SB24, SB27 or CSF42
  - » Order two units for SB39, SB42 or SB48
- STO TRAY 22:
  - » Order one unit for SB30, SB33, or SB36
- Sink front units match sink base sizes as noted above
- Tilt-Out Trays are NOT dishwasher safe

STO TRAY 11
STO TRAY 14
STO TRAY 22

Blind Corner Closure

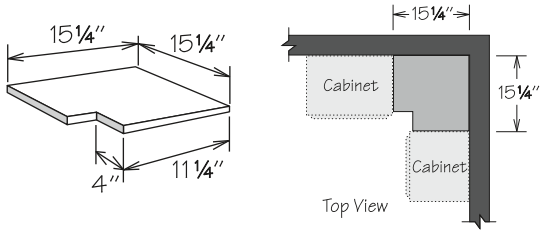

- Features ½" engineered wood with natural woodgrain look finished on both sides
- Field trimmable

BLC1515

DESK CABINETS & BOOKSHELVES

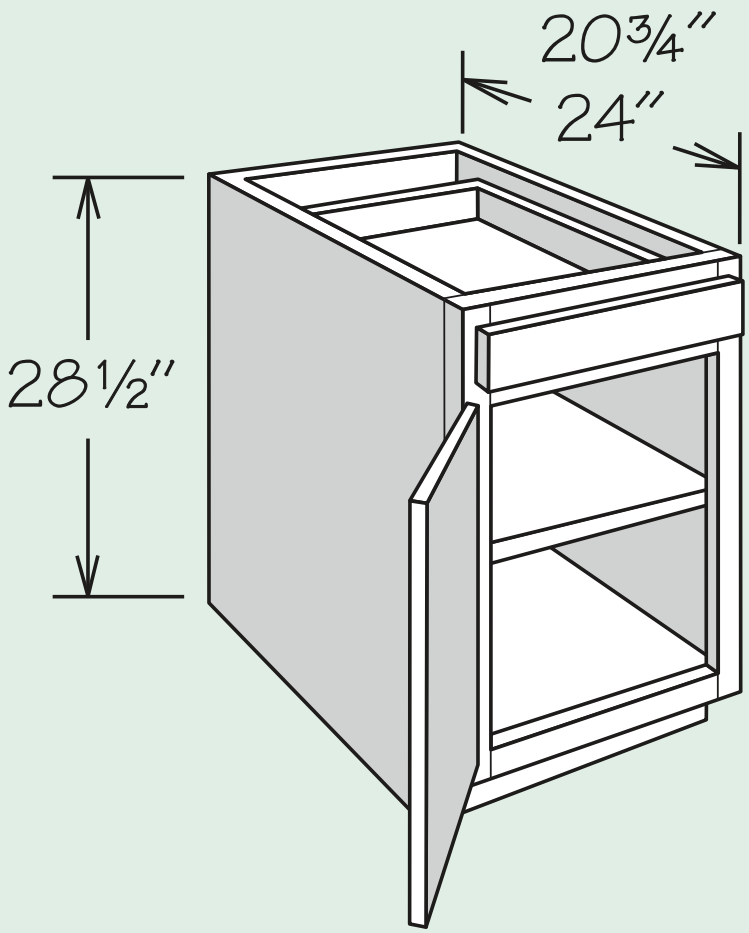

Desk Cabinet · 1 Door and 1 Drawer

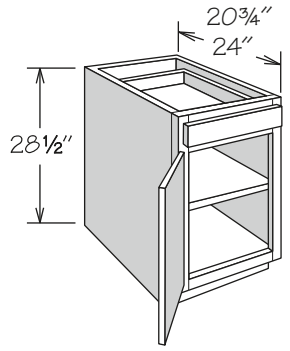

- One full-depth adjustable shelf
- May be accessorized with one sliding shelf
- Recommend mounting sliding shelf on cabinet floor (order separately)
- CCH and CCDW options are available on Portfolio Series only

PORTFOLIO SELECT & POTFOLIO	VALUE BUILT
APC	CFO
CCH	RD
CCDW	RTK
CFO	VTK
FE	
PE	
RD	
VTK	
RTK	

24" DEEP
DDO1224
DDO1524
DDO1824
DDO2124

21" DEEP
DDO1221
DDO1521
DDO1821
DDO2121

Desk Cabinet · 2 Butt Doors and 1 Drawer

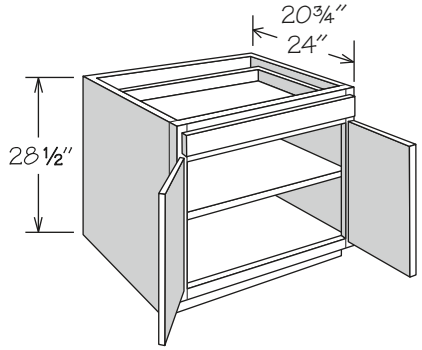

- One full-depth adjustable shelf
- May be accessorized with one sliding shelf
- Recommend mounting sliding shelf on cabinet floor (order separately)
- CCH and CCDW options are available on Portfolio Series only

PORTFOLIO SELECT & POTFOLIO	VALUE BUILT
APC	CFO
CCH	RD
CCDW	RTK
CFO	VTK
FE	
PE	
RD	
RTK	
VTK	

24" DEEP
DDO2424 BUTT

21" DEEP
DDO2421 BUTT

Desk Cabinet · 1 Door with Wastebasket Pull-Out

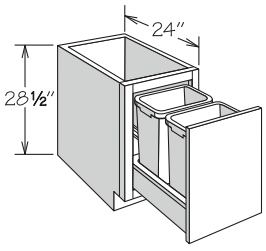

2 WASTEBASKETS

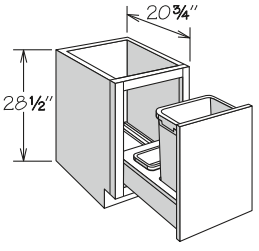

1 WASTEBASKET

- Cabinets indicated with as asterisk (*) are available for Portfolio Select and Portfolio Series only
- DWBB1824 wastebasket pull-out for Portfolio and Value Built features heavy-duty full-extension glides (100 pound rated)
- DWBB1821 wastebasket pull-out for Portfolio features heavy-duty full-extension CushionClose glides (100 pound rated)
- Wastebasket rests in a natural finish wood frame
- DWBB1824 features two silver plastic 35-quart capacity bins
- DWBB1821 features one silver plastic 35-quart capacity bin and bag storage tray at rear (not dishwasher safe)
- Decorative hardware strongly recommended
- CCDW option is available on Portfolio Series only

PORTFOLIO SELECT & POTFOLIO	VALUE BUILT
APC	RTK
CCDW ■	VTK
FE	
PE	
RTK	
VTK	

24" DEEP ▪ 2 WASTEBASKETS
DWBB1824 ■

21" DEEP ▪ 1 WASTEBASKET
*DWBB1821
N/A In Value Built

Desk Drawer Cabinet · 3 Drawers

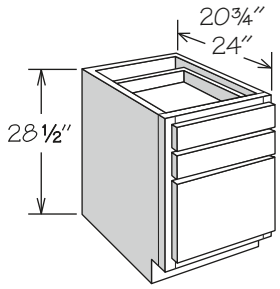

- One large and two standard drawers
- Large drawer cannot be used as a file drawer
- CCDW option is available on Portfolio Series only

PORTFOLIO SELECT & POTFOLIO	VALUE BUILT
APC	CFO
CCDW	RD
CFO	RTK
FE	VTK
PE	
RD	
RTK	
VTK	

24" DEEP
DDR1224
DDR1524
DDR1824
DDR2124
DDR2424

21" DEEP
DDR1221
DDR1521
DDR1821
DDR2121
DDR2421

Desk Cabinet · 1 Drawer and Door with File Pull-Out

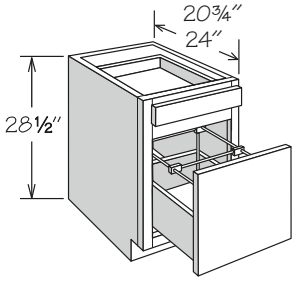

- One standard top drawer
- Features one natural finish wood drawer body attached to door pull-out
- File unit packaged separately for field installation
- Will accept letter or legal-size hanging files
- CCDW option is available on Portfolio Series only

PORTFOLIO SELECT & POTFOLIO	VALUE BUILT
APC	RTK
CCDW	VTK
FE	
PE	
RTK	
VTK	

24" DEEP
DFDC1824

21" DEEP
DFDC1821

Furniture Drawer Cabinet · 1 Drawer

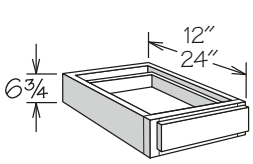

6" HIGH

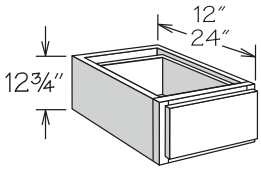

12" HIGH

- 6" high features one standard drawer and 12" high features one large drawer
- 24" deep Furniture Drawer cabinets are only available with RD-23 through RD-13
- Bottom of cabinet frame must be fully supported
- CCDW option is available on Portfolio Series only

PORTFOLIO SELECT & POTFOLIO	VALUE BUILT
APC	CFO
CCDW	RD ■
CFO	
FE	
PE	
RD ■	

6" HIGH • 1 DRAWER

12" Deep	24" Deep
FD121206	FD122406 ■
FD151206	FD152406 ■
FD181206	FD182406 ■
FD211206	FD212406 ■
FD241206	FD242406 ■
FD271206	FD272406 ■
FD301206	FD302406 ■
FD331206	FD332406 ■
FD361206	FD362406 ■

12" HIGH • 1 DRAWER

12" Deep	24" Deep
FD121212	FD122412 ■
FD151212	FD152412 ■
FD181212	FD182412 ■
FD211212	FD212412 ■
FD241212	FD242412 ■
FD271212	FD272412 ■
FD301212	FD302412 ■
FD331212	FD332412 ■
FD361212	FD362412 ■

Kneehole Drawer Cabinet

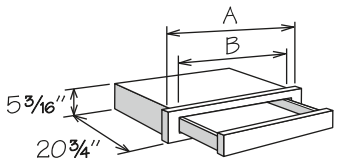

- Designed for desk or vanity application
- Field trimmable in height to 4¾"
- Field trimmable in depth to 18" or available with RD-20 through RD-12
- Drawer front complements door style - refer to door style section
- CCDW option is available on Portfolio Series only

PORTFOLIO SELECT & POTFOLIO	VALUE BUILT
CCDW	RD
RD	

	A	B	MAX. TRIM
KDC27/21	27"	17¾"	21" (3" each side)
KDC33/27	33"	23¾"	27" (3" each side)
KDC36/33	36"	29¾"	33" (1½" each side)

Storage Cube

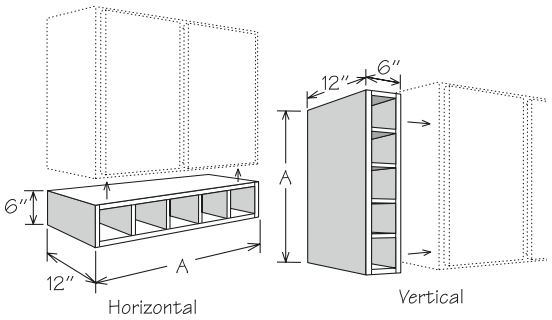

30" Shown

- Vertical installation may require the use of fillers and/or molding which must be ordered separately
- Opening size is 5" wide x 4½" high (horizontal) which will accommodate most envelopes and various other office supplies
- All door styles feature ¾" veneered engineered wood finished to match cabinet box exterior
- Flush sides with no face frame or ¼" reveals
- Interior finished to match cabinet box exterior
- Cannot be retrofitted with Spice Drawer Cabinet drawers

	A	NUMBER OF OPENINGS
SC30	30"	5
SC36	36"	6
SC42	42"	7

Tall Bookshelf

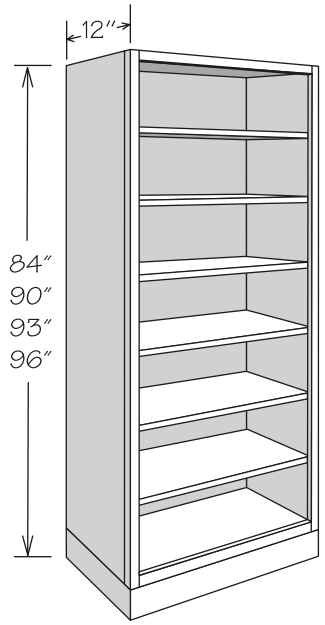

96" High Shown

- Cabinets indicated with an asterisk (*) are available for Portfolio Select and Portfolio only
- Interior finished to match cabinet box exterior
- Flush furniture toe kick
- Toe kick shipped unattached for 93" and 96" high bookshelves
- 23/32" veneered adjustable shelves packaged separately

PORTFOLIO SELECT & POTFOLIO	VALUE BUILT
APC	ID
FE	RD
ID	
PE	
RD	

12" DEEP

96"H • 6 Shelves
BS1896
BS2496
BS3096
BS3696

93"H • 6 Shelves
*BS1893
*BS2493
*BS3093
*BS3693

**N/A for Value Built*

90"H • 6 Shelves
BS1890
BS2490
BS3090
BS3690

84"H • 5 Shelves
BS1884
BS2484
BS3084
BS3684

Wall Bookshelf



60" High Shown

- Interior finished to match cabinet box exterior
- 23/32" adjustable shelves packaged separately

PORTFOLIO SELECT & POTFOLIO	VALUE BUILT
APC	ID
FE	RD
ID	
PE	
RD	

12" DEEP

60"H ▪ 4 Shelves	48"H ▪ 3 Shelves
BS1860	BS1848
BS2460	BS2448
BS3060	BS3048
BS3660	BS3648

Base Bookshelf

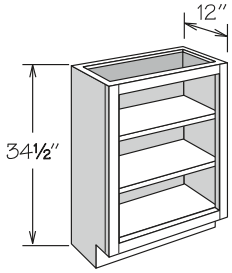

- Interior finished to match cabinet box exterior
- Two adjustable 23/32" shelves packaged separately

PORTFOLIO SELECT & POTFOLIO	VALUE BUILT
APC	ID
FE	RD
ID	RTK
PE	VTK
RD	
RTK	
VTK	

12" DEEP

BS2434

Sliding Shelf Kit

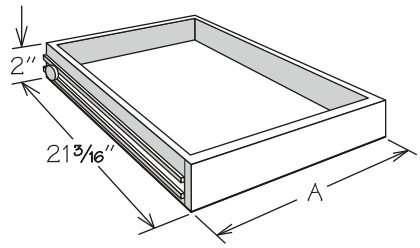

- Field installation accessory
- Engineered wood drawer with solid hardwood front, MDF bottom, and side-mounted drawer glides
- Includes sliding shelf, all glide hardware, and instructions
- SSKs can be used with all single and double door base cabinets
- SSK drill template is required for all double door cabinets that have fixed center stile – contact Customer Care for drill template

PORTFOLIO SELECT & POTFOLIO	VALUE BUILT
CCSS	RD
RD	

SLIDING SHELF KIT	A
SSK12	8½"
SSK15	11½"
SSK18	14½"
SSK21	17½"
SSK24	20½"

Floating Shelf

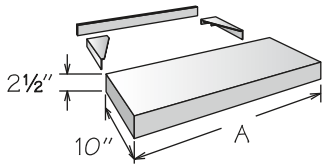

- Not trimmable
- Finished on all sides to match cabinet box exterior
- Constructed of engineered wood top and bottom and solid wood front and sides
- When installed between two cabinets, Furniture Ends (FE) or Wall End Panel (WEP) is recommended for adjacent cabinets
- Must be secured to studs in wall
- Installation instructions, mounting brackets, and screws included

10" DEEP	A	MAX. LOAD
FLSH2410	24"	30 lbs.
FLSH3010	30"	37 lbs.
FLSH3610	36"	45 lbs.
FLSH4210	42"	52 lbs.
FLSH4810	48"	60 lbs.

Desk End Panel

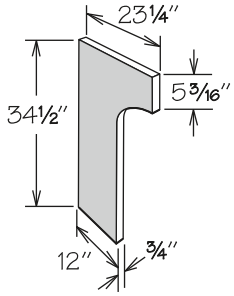

- All door styles feature ¾" veneered engineered wood finished to match cabinet box exterior on both sides
- Recommend QM8 be ordered for installation to ensure proper attachment to wall
- Field trimmable
- Edge banded on front

34½" HIGH
DEP

TALL CABINETS

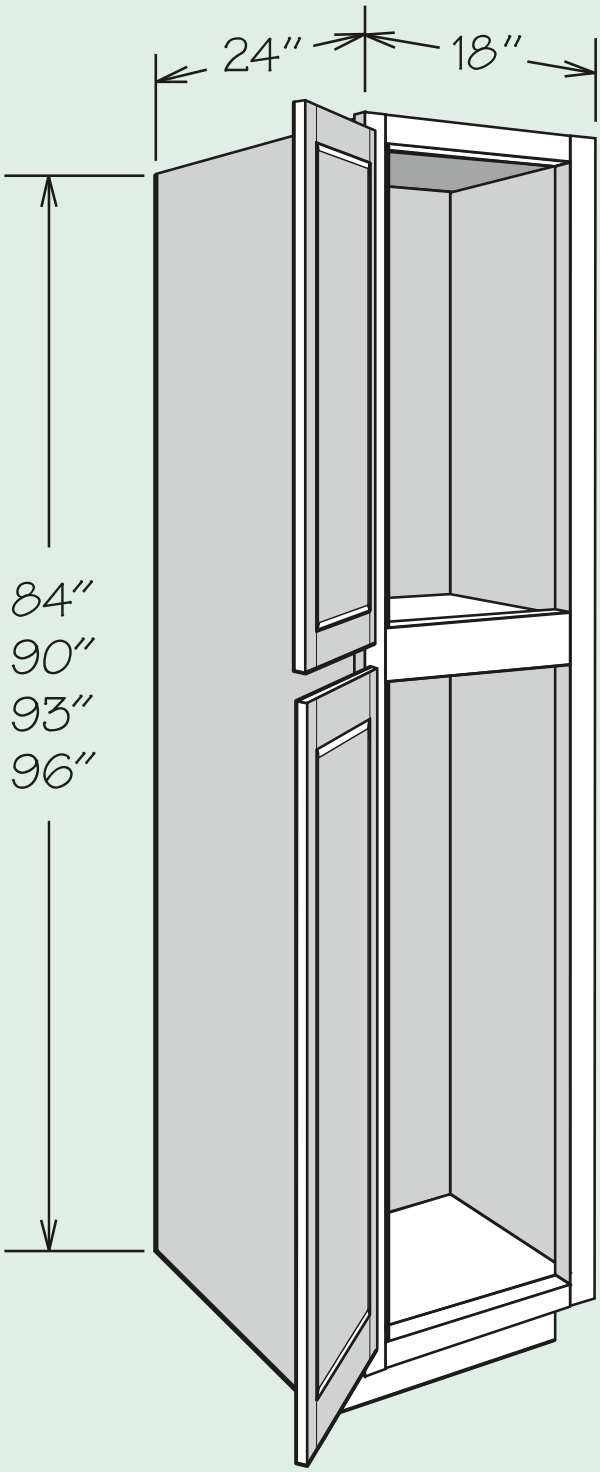

Utility Cabinet

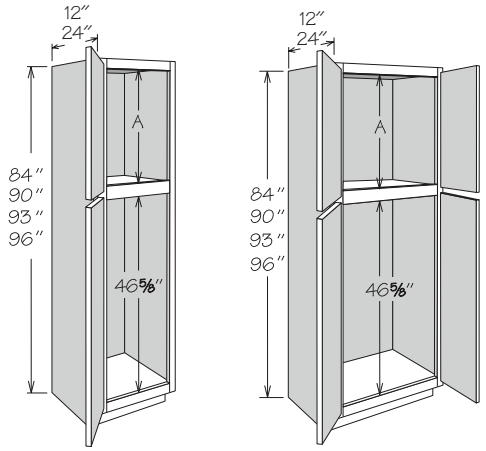

2 DOORS 4 BUTT DOORS

84" High Shown

- Cabinets indicated with an asterisk (*) are available for Portfolio Select and Portfolio Series only
- Shelving and optional interior accessories may be ordered separately (refer to Utility Cabinet Accessories for details)
- Cabinet backs are pre-drilled to accept up to four sliding shelves in lower section
- 4" inset toe kick assembly shipped inside 93" and 96" high cabinet — 33" wide x 93" high toe kicks ship as two pieces - seam will be visible between toe kick box and side of cabinet
- Two door cabinets must be ordered hinged left or right
- Specialty Door cabinets (SD) feature Matching Interior standard and require a specialty door selection
- Bottom doors have a center rail for select door styles - refer to door style section
- CCH option is available on Portfolio Series only

PORTFOLIO SELECT & POTFOLIO	VALUE BUILT
AH	CFO
APC	MI ■
CCH	RD
CFO	VTK ◆
FE	
MI ■	
PE	
RD	
VTK ◆	

	A
84" High	26⅞"
90" High	32⅞"
93" High	35⅞"
96" High	38⅞"

2 DOORS ▪ 12" DEEP

96" H

UT1212 X 96 ■
UT1512 X 96 ■
UT1812 X 96 ■
UT2112 X 96 ■
UT1212 X 96 SD
UT1512 X 96 SD
UT1812 X 96 SD
UT2112 X 96 SD

93" H

*UT1212 X 93 ■
*UT1512 X 93 ■
*UT1812 X 93 ■
*UT2112 X 93 ■
*UT1212 X 93 SD
*UT1512 X 93 SD
*UT1812 X 93 SD
*UT2112 X 93 SD

N/A for Value Built

90" H

UT1212 X 90 ■ ◆
UT1512 X 90 ■ ◆
UT1812 X 90 ■ ◆
UT2112 X 90 ■ ◆
UT1212 X 90 SD ◆
UT1512 X 90 SD ◆
UT1812 X 90 SD ◆
UT2112 X 90 SD ◆

84" H

UT1212 X 84 ■ ◆
UT1512 X 84 ■ ◆
UT1812 X 84 ■ ◆
UT2112 X 84 ■ ◆
UT1812 X 84 SD ◆
UT1212 X 84 SD ◆
UT1512 X 84 SD ◆
UT2112 X 84 SD ◆

2 DOORS ▪ 24" DEEP

96" H

UT1224 X 96 ■
UT1524 X 96 ■
UT1824 X 96 ■
UT2124 X 96 ■
UT1224 X 96 SD
UT1524 X 96 SD
UT1824 X 96 SD
UT2124 X 96 SD

93" H

*UT1224 X 93 ■
*UT1524 X 93 ■
*UT1824 X 93 ■
*UT2124 X 93 ■
*UT1224 X 93 SD
*UT1524 X 93 SD
*UT1824 X 93 SD
*UT2124 X 93 SD

N/A for Value Built

90" H

UT1224 X 90 ■ ◆
UT1524 X 90 ■ ◆
UT1824 X 90 ■ ◆
UT2124 X 90 ■ ◆
UT1224 X 96 SD ◆
UT1524 X 90 SD ◆
UT1824 X 90 SD ◆
UT2124 X 90 SD ◆

84" H

UT1224 X 84 ■ ◆
UT1524 X 84 ■ ◆
UT1824 X 84 ■ ◆
UT2124 X 84 ■ ◆
UT1224 X 84 SD ◆
UT1524 X 84 SD ◆
UT1824 X 84 SD ◆
UT2124 X 84 SD ◆

4 BUTT DOORS ▪ 12" DEEP

96" H

UT2412 X 96 BUTT ■
UT2412 X 96 BUTT SD

93" H

*UT2412 X 93 BUTT ■
*UT2412 X 93 BUTT SD

N/A for Value Built

90" H

UT2412 X 90 BUTT ■ ◆
UT2412 X 90 BUTT SD ◆

84" H

UT2412 X 84 BUTT ■ ◆
UT2412 X 84 BUTT SD ◆

4 BUTT DOORS ▪ 24" DEEP

96" H

UT2424 X 96 BUTT ■
UT2724 X 96 BUTT ■
UT3024 X 96 BUTT ■
UT3324 X 96 BUTT ■
UT3624 X 96 BUTT ■
UT2424 X 96 BUTT SD
UT2724 X 96 BUTT SD
UT3024 X 96 BUTT SD
UT3324 X 96 BUTT SD
UT3624 X 96 BUTT SD

93" H

*UT2424 X 93 BUTT ■
*UT2724 X 93 BUTT ■
*UT3024 X 93 BUTT ■
*UT3324 X 93 BUTT ■
*UT3624 X 93 BUTT ■
*UT2424 X 93 BUTT SD
*UT2724 X 93 BUTT SD
*UT3024 X 93 BUTT SD
*UT3324 X 93 BUTT SD
*UT3624 X 93 BUTT SD

N/A for Value Built

90" H

UT2424 X 90 BUTT ■ ◆
UT2724 X 90 BUTT ■ ◆
UT3024 X 90 BUTT ■ ◆
UT3324 X 90 BUTT ■ ◆
UT3624 X 90 BUTT ■ ◆
UT2424 X 90 BUTT SD ◆
UT2724 X 90 BUTT SD ◆
UT3024 X 90 BUTT SD ◆
UT3324 X 90 BUTT SD ◆
UT3624 X 90 BUTT SD ◆

84" H

UT2424 X 84 BUTT ■ ◆
UT2724 X 84 BUTT ■ ◆
UT3024 X 84 BUTT ■ ◆
UT3324 X 84 BUTT ■ ◆
UT3624 X 84 BUTT ■ ◆
UT2424 X 84 BUTT SD ◆
UT2724 X 84 BUTT SD ◆
UT3024 X 84 BUTT SD ◆
UT3324 X 84 BUTT SD ◆
UT3624 X 84 BUTT SD ◆

Utility Cabinet · Adjustable Shelves

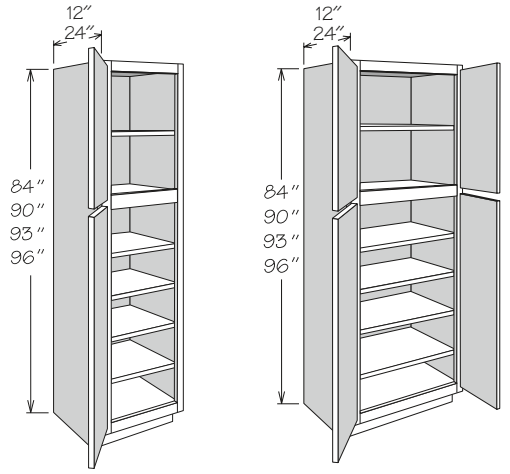

2 DOORS 4 BUTT DOORS

84" High Shown

- Cabinets indicated with an asterisk (*) are available for Portfolio Select and Portfolio Series only
- Full-depth adjustable shelves are ¾" engineered wood and edge banded on front edge only
- Bottom section features four adjustable shelves
- All shelving packaged separately for field installation
- 4" inset toe kick assembly shipped inside 93" and 96" high cabinet — 33" wide x 93" high toe kicks ship as two pieces - seam will be visible between toe kick box and side of cabinet
- Two door cabinets must be ordered hinged left or right
- Specialty Door cabinets (SD) feature Matching Interior standard and require a specialty door selection
- Bottom doors have a center rail for select door styles - refer to door style section
- CCH option is available on Portfolio Series only

PORTFOLIO SELECT & POTFOLIO	VALUE BUILT
AH	MI ■
APC	RD
CCH	VTK ◆
FE	
MI ■	
PE	
RD	
VTK ◆	

2 DOORS ▪ 12" DEEP

96" H ▪ 3 Top Shelves

UT1212 X 96 AS ■
UT1512 X 96 AS ■
UT1812 X 96 AS ■
UT2112 X 96 AS ■
UT1212 X 96 AS SD
UT1512 X 96 AS SD
UT1812 X 96 AS SD
UT2112 X 96 AS SD

90" H ▪ 2 Top Shelves

UT1212 X 90 AS ■ ◆
UT1512 X 90 AS ■ ◆
UT1812 X 90 AS ■ ◆
UT2112 X 90 AS ■ ◆
UT1212 X 90 AS SD ◆
UT1512 X 90 AS SD ◆
UT1812 X 90 AS SD ◆
UT2112 X 90 AS SD ◆

93" H ▪ 3 Top Shelves

*UT1212 X 93 AS ■
*UT1512 X 93 AS ■
*UT1812 X 93 AS ■
*UT2112 X 93 AS ■
*UT1212 X 93 AS SD
*UT1512 X 93 AS SD
*UT1812 X 93 AS SD
*UT2112 X 93 AS SD

N/A for Value Built

84" H ▪ 1 Top Shelf

UT1212 X 84 AS ■ ◆
UT1512 X 84 AS ■ ◆
UT1812 X 84 AS ■ ◆
UT2112 X 84 AS ■ ◆
UT1212 X 84 AS SD ◆
UT1512 X 84 AS SD ◆
UT1812 X 84 AS SD ◆
UT2112 X 84 AS SD ◆

2 DOORS ▪ 24" DEEP

96" H ▪ 3 Top Shelves

UT1224 X 96 AS ■
UT1524 X 96 AS ■
UT1824 X 96 AS ■
UT2124 X 96 AS ■
UT1224 X 96 AS SD
UT1524 X 96 AS SD
UT1824 X 96 AS SD
UT2124 X 96 AS SD

90" H ▪ 2 Top Shelves

UT1224 X 90 AS ■ ◆
UT1524 X 90 AS ■ ◆
UT1824 X 90 AS ■ ◆
UT2124 X 90 AS ■ ◆
UT1224 X 90 AS SD ◆
UT1524 X 90 AS SD ◆
UT1824 X 90 AS SD ◆
UT2124 X 90 AS SD ◆

93" H ▪ 3 Top Shelves

*UT1224 X 93 AS ■
*UT1524 X 93 AS ■
*UT1824 X 93 AS ■
*UT2124 X 93 AS ■
*UT1224 X 93 AS SD
*UT1524 X 93 AS SD
*UT1824 X 93 AS SD
*UT2124 X 93 AS SD

N/A for Value Buil

84" H ▪ 1 Top Shelf

UT1224 X 84 AS ■ ◆
UT1524 X 84 AS ■ ◆
UT1824 X 84 AS ■ ◆
UT2124 X 84 AS ■ ◆
UT1224 X 84 AS SD ◆
UT1524 X 84 AS SD ◆
UT1824 X 84 AS SD ◆
UT2124 X 84 AS SD ◆

4 BUTT DOORS ▪ 12" DEEP

96" H ▪ 3 Top Shelves

UT2412 X 96 AS BUTT ■
UT2412 X 96 AS BUTT SD

90" H ▪ 2 Top Shelves

UT2412 X 90 AS BUTT ■ ◆
UT2412 X 90 AS BUTT SD ◆

93" H ▪ 3 Top Shelves

*UT2412 X 93 AS BUTT ■
*UT2412 X 93 AS BUTT SD

N/A for Value Built

84" H ▪ 1 Top Shelf

UT2412 X 84 AS BUTT ■ ◆
UT2412 X 84 AS BUTT SD ◆

4 BUTT DOORS ▪ 24" DEEP

96" H ▪ 3 Top Shelves

UT2424 X 96 AS BUTT ■
UT2724 X 96 AS BUTT ■
UT3024 X 96 AS BUTT ■
UT3324 X 96 AS BUTT ■
UT3624 X 96 AS BUTT ■
UT2424 X 96 AS BUTT SD
UT2724 X 96 AS BUTT SD
UT3024 X 96 AS BUTT SD
UT3324 X 96 AS BUTT SD
UT3624 X 96 AS BUTT SD

90" H ▪ 2 Top Shelves

UT2424 X 90 AS BUTT ■ ◆
UT2724 X 90 AS BUTT ■ ◆
UT3024 X 90 AS BUTT ■ ◆
UT3324 X 90 AS BUTT ■ ◆
UT3624 X 90 AS BUTT ■ ◆
UT2424 X 90 AS BUTT SD ◆
UT2724 X 90 AS BUTT SD ◆
UT3024 X 90 AS BUTT SD ◆
UT3324 X 90 AS BUTT SD ◆
UT3624 X 90 AS BUTT SD ◆

93" H ▪ 3 Top Shelves

*UT2424 X 93 AS BUTT ■
*UT2724 X 93 AS BUTT ■
*UT3024 X 93 AS BUTT ■
*UT3324 X 93 AS BUTT ■
*UT3624 X 93 AS BUTT ■
*UT2424 X 93 AS BUTT SD
*UT2724 X 93 AS BUTT SD
*UT3024 X 93 AS BUTT SD
*UT3324 X 93 AS BUTT SD
*UT3624 X 93 AS BUTT SD

N/A for Value Built

84" H ▪ 1 Top Shelf

UT2424 X 84 AS BUTT ■ ◆
UT2724 X 84 AS BUTT ■ ◆
UT3024 X 84 AS BUTT ■ ◆
UT3324 X 84 AS BUTT ■ ◆
UT3624 X 84 AS BUTT ■ ◆
UT2424 X 84 AS BUTT SD ◆
UT2724 X 84 AS BUTT SD ◆
UT3024 X 84 AS BUTT SD ◆
UT3324 X 84 AS BUTT SD ◆
UT3624 X 84 AS BUTT SD ◆

Utility Cabinet · Sliding Shelves

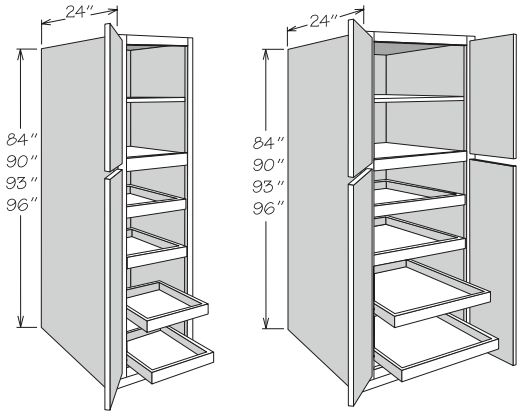

2 DOORS 4 BUTT DOORS

84" High Shown

- Cabinets indicated with an asterisk (*) are available for Portfolio Select and Portfolio Series only
- Full-depth adjustable shelves are ¾" engineered wood and edge banded on front edge only
- Bottom section features four sliding shelves
- All shelving and SSK sliding shelves packaged separately for field installation
- 4" inset toe kick assembly shipped inside 93" and 96" high cabinet — 33" wide x 93" high toe kicks ship as two pieces - seam will be visible between toe kick box and side of cabinet
- Engineered wood sliding shelves with solid hardwood front, MDF bottom, and side-mounted drawer glides
- Two door cabinets must be ordered hinged left or right
- Specialty Door cabinets (SD) feature Matching Interior standard and require a specialty door selection
- Bottom doors have a center rail for select door styles - refer to door style section
- CCH option is available on Portfolio Series only

PORTFOLIO SELECT & POTFOLIO	VALUE BUILT
AH	MI ■
APC	RD
CCH	VTK ◆
CCSS	
FE	
MI ■	
PE	
RD	
VTK ◆	

2 DOORS

96" H ▪ 3 Top Shelves

UT1224 X 96 4SSK ■
UT1524 X 96 4SSK ■
UT1824 X 96 4SSK ■
UT2124 X 96 4SSK ■

UT1224 X 96 4SSK SD
UT1524 X 96 4SSK SD
UT1824 X 96 4SSK SD
UT2124 X 96 4SSK SD

93" H ▪ 3 Top Shelves

*UT1224 X 93 4SSK ■
*UT1524 X 93 4SSK ■
*UT1824 X 93 4SSK ■
*UT2124 X 93 4SSK ■

*UT1224 X 93 4SSK SD
*UT1524 X 93 4SSK SD
*UT1824 X 93 4SSK SD
*UT2124 X 93 4SSK SD

N/A for Value Built

90" H ▪ 2 Top Shelves

UT1224 X 90 4SSK ■ ◆
UT1524 X 90 4SSK ■ ◆
UT1824 X 90 4SSK ■ ◆
UT2124 X 90 4SSK ■ ◆

UT1224 X 90 4SSK SD ◆
UT1524 X 90 4SSK SD ◆
UT1824 X 90 4SSK SD ◆
UT2124 X 90 4SSK SD ◆

84" H ▪ 1 Top Shelf

UT1224 X 84 4SSK ■ ◆
UT1524 X 84 4SSK ■ ◆
UT1824 X 84 4SSK ■ ◆
UT2124 X 84 4SSK ■ ◆

UT1224 X 84 4SSK SD ◆
UT1524 X 84 4SSK SD ◆
UT1824 X 84 4SSK SD ◆
UT2124 X 84 4SSK SD ◆

4 BUTT DOORS

96" H ▪ 3 Top Shelves

UT2424 X 96 4SSK BUTT ■
UT2724 X 96 4SSK BUTT ■
UT3024 X 96 4SSK BUTT ■
UT3324 X 96 4SSK BUTT ■
UT3624 X 96 4SSK BUTT ■

UT2424 X 96 4SSK BUTT SD
UT2724 X 96 4SSK BUTT SD
UT3024 X 96 4SSK BUTT SD
UT3324 X 96 4SSK BUTT SD
UT3624 X 96 4SSK BUTT SD

93" H ▪ 3 Top Shelves

*UT2424 X 93 4SSK BUTT ■
*UT2724 X 93 4SSK BUTT ■
*UT3024 X 93 4SSK BUTT ■
*UT3324 X 93 4SSK BUTT ■
*UT3624 X 93 4SSK BUTT ■

*UT2424 X 93 4SSK BUTT SD
*UT2724 X 93 4SSK BUTT SD
*UT3024 X 93 4SSK BUTT SD
*UT3324 X 93 4SSK BUTT SD
*UT3624 X 93 4SSK BUTT SD

N/A for Value Built

90" H ▪ 2 Top Shelves

UT2424 X 90 4SSK BUTT ■ ◆
UT2724 X 90 4SSK BUTT ■ ◆
UT3024 X 90 4SSK BUTT ■ ◆
UT3324 X 90 4SSK BUTT ■ ◆
UT3624 X 90 4SSK BUTT ■ ◆

UT2424 X 90 4SSK BUTT SD ◆
UT2724 X 90 4SSK BUTT SD ◆
UT3024 X 90 4SSK BUTT SD ◆
UT3324 X 90 4SSK BUTT SD ◆
UT3624 X 90 4SSK BUTT SD ◆

84" H ▪ 1 Top Shelf

UT2424 X 84 4SSK BUTT ■ ◆
UT2724 X 84 4SSK BUTT ■ ◆
UT3024 X 84 4SSK BUTT ■ ◆
UT3324 X 84 4SSK BUTT ■ ◆
UT3624 X 84 4SSK BUTT ■ ◆

UT2424 X 84 4SSK BUTT SD ◆
UT2724 X 84 4SSK BUTT SD ◆
UT3024 X 84 4SSK BUTT SD ◆
UT3324 X 84 4SSK BUTT SD ◆
UT3624 X 84 4SSK BUTT SD ◆

Single Oven Cabinet · 4 Butt Doors

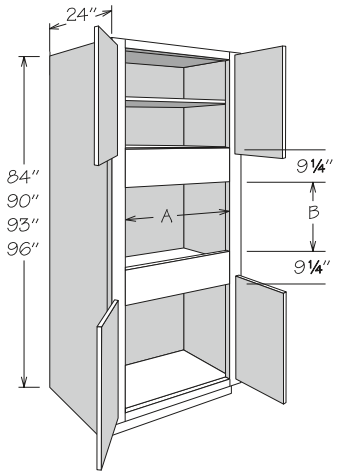

90" High Shown

- Cabinets indicated with an asterisk (*) are available for Portfolio Select and Portfolio Series only
- Features a solid back
- 3⅛" stiles
- All door styles feature face-mount hinges
- Full-depth adjustable shelves and ¾" engineered wood and edge banded on front edge only
- Shelf packaged separately for field installation
- 4" inset toe kick assembly shipped inside 93" and 96" high cabinets — 33" wide x 93" high toe kicks ship as two pieces - seam will be visible between toe kick box and side of cabinet
- Refer to appliance manufacturer's specifications for adequate clearances and required installation materials
- CCH option is available on Portfolio Series only

PORTFOLIO SELECT & POTFOLIO	VALUE BUILT
AH	CFO
APC	RD
CCH	VTK ◆
CFO	
FE	
PE	
RD	
VTK ◆	

	A ACTUAL	A MAX.	B ACTUAL	B MAX.
96"H ▪ 2 Top Shelves				
OVS2796 AS BUTT	20¾"	25"	22⅛"	37⅜"
OVS3096 AS BUTT	23¾"	28"	22⅛"	37⅜"
OVS3396 AS BUTT	26¾"	31"	22⅛"	37⅜"
93"H ▪ 2 Top Shelves				
*OVS2793 AS BUTT	20¾"	25"	22⅛"	37⅜"
*OVS3093 AS BUTT	23¾"	28"	22⅛"	37⅜"
*OVS3393 AS BUTT *N/A for Value Built*	26¾"	31"	22⅛"	37⅜"
90"H ▪ 1 Top Shelf				
OVS2790 AS BUTT ◆	20¾"	25"	21¾"	37"
OVS3090 AS BUTT ◆	23¾"	28"	21¾"	37"
OVS3390 AS BUTT ◆	26¾"	31"	21¾"	37"
84"H ▪ No Shelf				
OVS2784 BUTT ◆	20¾"	25"	22⅛"	37⅜"
OVS3084 BUTT ◆	23¾"	28"	22⅛"	37⅜"
OVS3384 BUTT ◆	26¾"	31"	22⅛"	37⅜"

Single Oven Cabinet · 4 Butt Doors and Pot & Pan Organizer

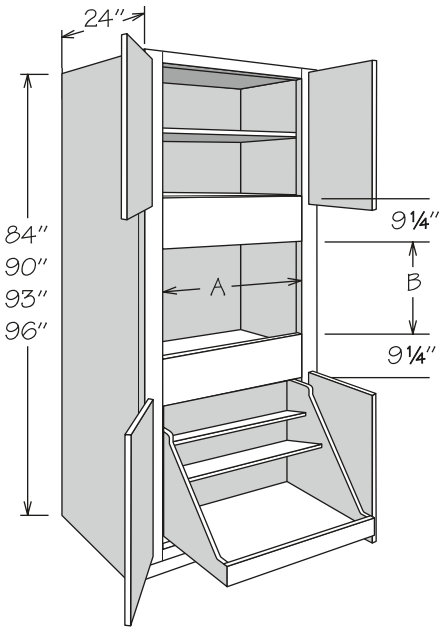

90" High Shown

- Base Pot & Pan Organizer now features CushionClose glides
- Cabinets indicated with an asterisk (*) are available for Portfolio Select and Portfolio Series only
- Features a solid back
- 3⅛" stiles
- All doors styles feature face-mount hinges
- Shelving and Pot & Pan Organizer packaged separately for field installation
- Organizer in natural finish solid wood and wood veneer with dovetail (front only) construction and full-extension CushionClose glides
- Organizer top shelf measures 6³⁄₁₆" deep
- Organizer middle shelf measures 9¾" deep
- 4" inset toe kick assembly shipped inside 93" and 96" high cabinets — 33" wide x 93" high toe kicks ship as two pieces - seam will be visible between toe kick box and side of cabinet
- Refer to appliance manufacturer's specifications for adequate clearances and required installation materials
- CCH option is available on Portfolio Series only

PORTFOLIO SELECT & POTFOLIO

APC
CCH
FE
PE
VTK ◆

	A ACTUAL	A MAX.	B ACTUAL	B MAX.
96"H ▪ 2 Top Shelves				
*OVS2796 BUTT CCBPPO	20¾"	25"	22⅛"	37⅜"
*OVS3096 BUTT CCBPPO	23¾"	28"	22⅛"	37⅜"
*OVS3396 BUTT CCBPPO *N/A for Value Built*	26¾"	31"	22⅛"	37⅜"
93"H ▪ 2 Top Shelves				
*OVS2793 BUTT CCBPPO	20¾"	25"	22⅛"	37⅜"
*OVS3093 BUTT CCBPPO	23¾"	28"	22⅛"	37⅜"
*OVS3393 BUTT CCBPPO *N/A for Value Built*	26¾"	31"	22⅛"	37⅜"
90"H ▪ 1 Top Shelf				
*OVS2790 BUTT CCBPPO ◆	20¾"	25"	21¾"	37"
*OVS3090 BUTT CCBPPO ◆	23¾"	28"	21¾"	37"
*OVS3390 BUTT CCBPPO ◆ *N/A for Value Built*	26¾"	31"	21¾"	37"
84"H ▪ No Shelf				
*OVS2784 BUTT CCBPPO ◆	20¾"	25"	22⅛"	37⅜"
*OVS3084 BUTT CCBPPO ◆	23¾"	28"	22⅛"	37⅜"
*OVS3384 BUTT CCBPPO ◆ *N/A for Value Built*	26¾"	31"	22⅛"	37⅜"

Single Oven Cabinet · 4 Butt Doors and 1 Drawer

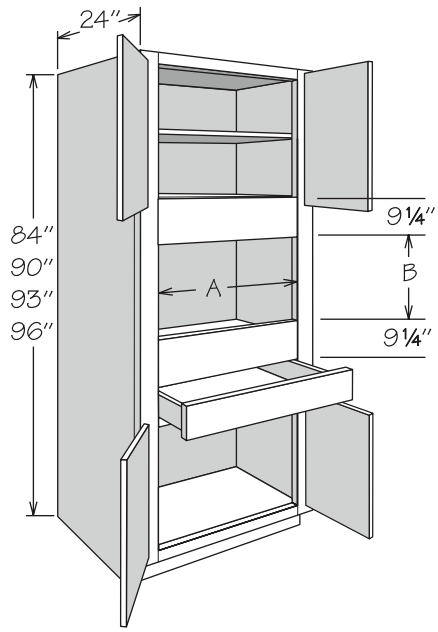

90" High Shown

- Cabinets indicated with an asterisk (*) are available for Portfolio Select and Portfolio Series only
- Features a solid back
- 3⅛" stiles
- All door styles feature face-mount hinges
- One standard drawer
- Full-depth adjustable shelves and ¾" engineered wood and edge banded on front edge only
- Shelf packaged separately for field installation
- 4" inset toe kick assembly shipped inside 93" and 96" high cabinets — 33" wide x 93" high toe kicks ship as two pieces - seam will be visible between toe kick box and side of cabinet
- Refer to appliance manufacturer's specifications for adequate clearances and required installation materials
- CCH and CCDW options are available on Portfolio Series only

PORTFOLIO SELECT & POTFOLIO	VALUE BUILT
AH	CFO
APC	RD
CCH	VTK ◆
CCDW	
CFO	
FE	
PE	
RD	
VTK ◆	

	A ACTUAL	A MAX.	B ACTUAL	B MAX.
96"H ▪ 2 Top Shelves				
OVS2796 AS BUTT 1DWR	20¾"	25"	16⅛"	31⅜"
OVS3096 AS BUTT 1DWR	23¾"	28"	16⅛"	31⅜"
OVS3396 AS BUTT 1DWR	26¾"	31"	16⅛"	31⅜"
93"H ▪ 2 Top Shelves				
*OVS2793 AS BUTT 1DWR	20¾"	25"	16⅛"	31⅜"
*OVS3093 AS BUTT 1DWR	23¾"	28"	16⅛"	31⅜"
*OVS3393 AS BUTT 1DWR	26¾"	31"	16⅛"	31⅜"
*N/A for Value Built				
90"H ▪ 1 Top Shelf				
OVS2790 AS BUTT 1DWR ◆	20¾"	25"	15¾"	31"
OVS3090 AS BUTT 1DWR ◆	23¾"	28"	15¾"	31"
OVS3390 AS BUTT 1DWR ◆	26¾"	31"	15¾"	31"
84"H ▪ No Shelf				
OVS2784 BUTT 1DWR ◆	20¾"	25"	16⅛"	31⅜"
OVS3084 BUTT 1DWR ◆	23¾"	28"	16⅛"	31⅜"
OVS3384 BUTT 1DWR ◆	26¾"	31"	16⅛"	31⅜"

Single Oven Cabinet · 4 Butt Doors and 1 Drawer, Pot & Pan Organizer

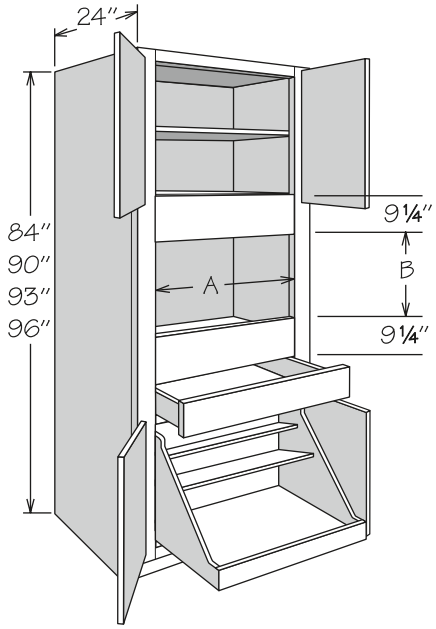

90" High Shown

- Base Pot & Pan Organizer now features CushionClose glides
- Cabinets indicated with an asterisk (*) are available for Portfolio Select and Portfolio Series only
- Features a solid back
- 3⅛" stiles
- All door styles feature face-mount hinges
- Full-depth adjustable shelves and ¾" engineered wood and edge banded on front edge only
- Shelving and Pot & Pan Organizer packaged separately for field installation
- Organizer in natural finish solid wood and wood veneer with dovetail (front only) construction and full-extension CushionClose glides
- Organizer top shelf measures 6³⁄₁₆" deep
- Organizer middle shelf measures 9¾" deep
- 4" inset toe kick assembly shipped inside 93" and 96" high cabinets — 33" wide x 93" high toe kicks ship as two pieces - seam will be visible between toe kick box and side of cabinet
- Refer to appliance manufacturer's specifications for adequate clearances and required installation materials
- CCH and CCDW options are available on Portfolio Series only - upgraded drawer option applies to drawer only

PORTFOLIO SELECT & POTFOLIO

APC
CCH
CCDW
FE
PE
VTK ◆

	A ACTUAL	A MAX.	B ACTUAL	B MAX.
96"H ▪ 2 Top Shelves				
*OVS2796 BUTT 1DWR CCBPPO	20¾"	25"	16⅛"	31⅜"
*OVS3096 BUTT 1DWR CCBPPO	23¾"	28"	16⅛"	31⅜"
*OVS3396 BUTT 1DWR CCBPPO	26¾"	31"	16⅛"	31⅜"
*N/A for Value Built				
93"H ▪ 2 Top Shelves				
*OVS2793 BUTT 1DWR CCBPPO	20¾"	25"	16⅛"	31⅜"
*OVS3093 BUTT 1DWR CCBPPO	23¾"	28"	16⅛"	31⅜"
*OVS3393 BUTT 1DWR CCBPPO	26¾"	31"	16⅛"	31⅜"
*N/A for Value Built				
90"H ▪ 1 Top Shelf				
*OVS2790 BUTT 1DWR CCBPPO ◆	20¾"	25"	15¾"	31"
*OVS3090 BUTT 1DWR CCBPPO ◆	23¾"	28"	15¾"	31"
*OVS3390 BUTT 1DWR CCBPPO ◆	26¾"	31"	15¾"	31"
*N/A for Value Built				
84"H ▪ No Shelf				
*OVS2784 BUTT 1DWR CCBPPO ◆	20¾"	25"	16⅛"	31⅜"
*OVS3084 BUTT 1DWR CCBPPO ◆	23¾"	28"	16⅛"	31⅜"
*OVS3384 BUTT 1DWR CCBPPO ◆	26¾"	31"	16⅛"	31⅜"
*N/A for Value Built				

Single Oven Cabinet · 4 Butt Doors and 2 Drawers

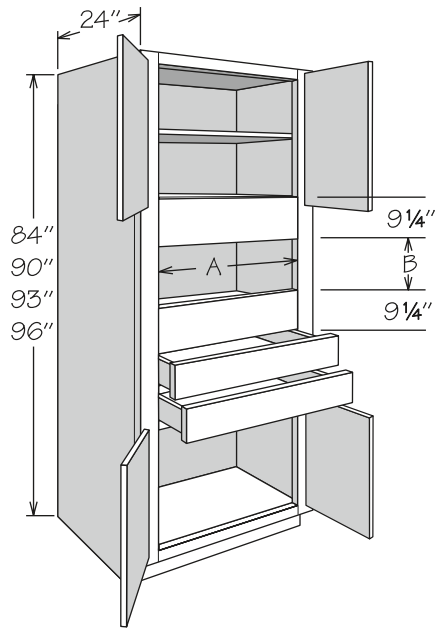

90" High Shown

- Cabinets indicated with an asterisk (*) are available for Portfolio Select and Portfolio Series only
- Features a solid back
- 3⅛" stiles
- All door styles feature face-mount hinges
- Two standard drawers
- Full-depth adjustable shelves and ¾" engineered wood and edge banded on front edge only
- Shelf packaged separately for field installation
- 4" inset toe kick assembly shipped inside 93" and 96" high cabinets — 33" wide x 93" high toe kicks ship as two pieces - seam will be visible between toe kick box and side of cabinet
- Refer to appliance manufacturer's specifications for adequate clearances and required installation materials
- CCH and CCDW options are available on Portfolio Series only

PORTFOLIO SELECT & POTFOLIO	VALUE BUILT
AH	CFO
APC	RD
CCH	VTK ◆
CCDW	
CFO	
FE	
PE	
RD	
VTK ◆	

	A ACTUAL	A MAX.	B ACTUAL	B MAX.
96"H • 2 Top Shelves				
OVS2796 AS BUTT 2DWR	20¾"	25"	10⅛"	25⅜"
OVS3096 AS BUTT 2DWR	23¾"	28"	10⅛"	25⅜"
OVS3396 AS BUTT 2DWR	26¾"	31"	10⅛"	25⅜"
93"H • 2 Top Shelves				
*OVS2793 AS BUTT 2DWR	20¾"	25"	10⅛"	25⅜"
*OVS3093 AS BUTT 2DWR	23¾"	28"	10⅛"	25⅜"
*OVS3393 AS BUTT 2DWR	26¾"	31"	10⅛"	25⅜"
*N/A for Value Built				
90"H • 1 Top Shelf				
OVS2790 AS BUTT 2DWR ◆	20¾"	25"	9¾"	25"
OVS3090 AS BUTT 2DWR ◆	23¾"	28"	9¾"	25"
OVS3390 AS BUTT 2DWR ◆	26¾"	31"	9¾"	25"
84"H • No Shelf				
OVS2784 BUTT 2DWR ◆	20¾"	25"	10⅛"	25⅜"
OVS3084 BUTT 2DWR ◆	23¾"	28"	10⅛"	25⅜"
OVS3384 BUTT 2DWR ◆	26¾"	31"	10⅛"	25⅜"

Single Oven Cabinet · 4 Butt Doors, 2 Drawers and Pot & Pan Organizer

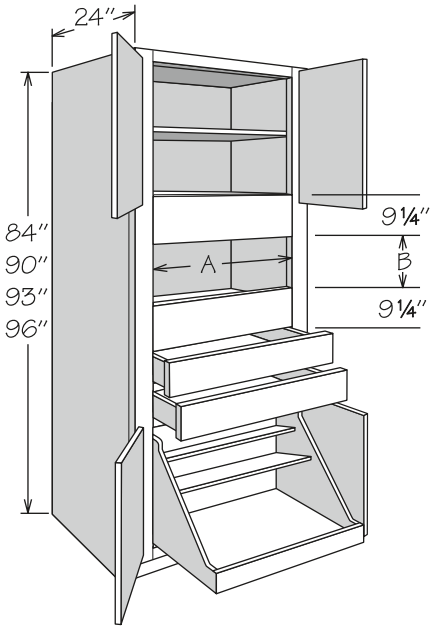

90" High Shown

- Base Pot & Pan Organizer now features CushionClose glides
- Cabinets indicated with an asterisk (*) are available for Portfolio Select and Portfolio Series only
- Features a solid back
- 3⅛" stiles
- All door styles feature face-mount hinges
- Two standard drawers
- Shelving and Pot & Pan Organizer packaged separately for field installation
- Organizer in natural finish solid wood and wood veneer with dovetail (front only) construction and full-extension CushionClose glides
- Organizer top shelf measures 6 3/16" deep
- Organizer middle shelf measures 9¾" deep
- Full-depth adjustable shelves and ¾" engineered wood and edge banded on front edge only
- 4" inset toe kick assembly shipped inside 93" and 96" high cabinets — 33" wide x 93" high toe kicks ship as two pieces - seam will be visible between toe kick box and side of cabinet
- Refer to appliance manufacturer's specifications for adequate clearances and required installation materials
- CCH and CCDW options are available on Portfolio Series only - upgraded drawer option applies to drawer only

PORTFOLIO SELECT & POTFOLIO

APC
CCH
CCDW
FE
PE
VTK ◆

	A ACTUAL	A MAX.	B ACTUAL	B MAX.
96"H ▪ 2 Top Shelves				
*OVS2796 BUTT 2DWR CCBPPO	20¾"	25"	10⅛"	25⅜"
*OVS3096 BUTT 2DWR CCBPPO	23¾"	28"	10⅛"	25⅜"
*OVS3396 BUTT 2DWR CCBPPO	26¾"	31"	10⅛"	25⅜"
N/A for Value Built				
93"H ▪ 2 Top Shelves				
*OVS2793 BUTT 2DWR CCBPPO	20¾"	25"	10⅛"	25⅜"
*OVS3093 BUTT 2DWR CCBPPO	23¾"	28"	10⅛"	25⅜"
*OVS3393 BUTT 2DWR CCBPPO	26¾"	31"	10⅛"	25⅜"
N/A for Value Built				
90"H ▪ 1 Top Shelf				
*OVS2790 BUTT 2DWR CCBPPO ◆	20¾"	25"	9¾"	25"
*OVS3090 BUTT 2DWR CCBPPO ◆	23¾"	28"	9¾"	25"
*OVS3390 BUTT 2DWR CCBPPO ◆	26¾"	31"	9¾"	25"
N/A for Value Built				
84"H ▪ No Shelf				
*OVS2784 BUTT 2DWR CCBPPO ◆	20¾"	25"	10⅛"	25⅜"
*OVS3084 BUTT 2DWR CCBPPO ◆	23¾"	28"	10⅛"	25⅜"
*OVS3384 BUTT 2DWR CCBPPO ◆	26¾"	31"	10⅛"	25⅜"
N/A for Value Built				

Single Oven Cabinet · 2 Butt Doors and 4 Drawers

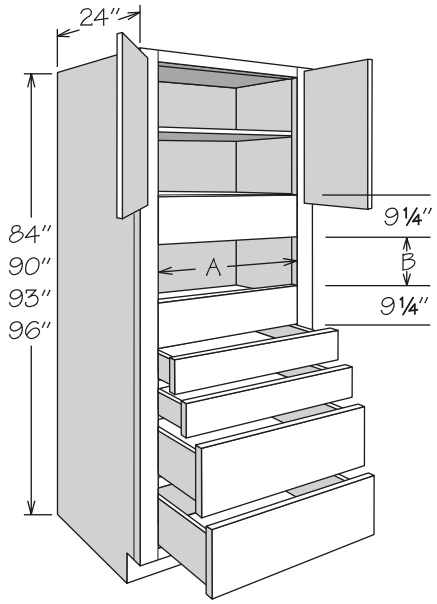

90" High Shown

- Cabinets indicated with an asterisk (*) are available for Portfolio Select and Portfolio Series only
- Features a solid back
- 3⅛" stiles
- All door styles feature face-mount hinges
- Two standard and two large drawers
- Shelf packaged separately for field installation
- Full-depth adjustable shelves and ¾" engineered wood and edge banded on front edge only
- 4" inset toe kick assembly shipped inside 93" and 96" high cabinets — 33" wide x 93" high toe kicks ship as two pieces - seam will be visible between toe kick box and side of cabinet
- Refer to appliance manufacturer's specifications for adequate clearances and required installation materials
- CCH and CCDW options are available on Portfolio Series only

PORTFOLIO SELECT & POTFOLIO	VALUE BUILT
AH	CFO
APC	RD
CCH	VTK ◆
CCDW	
CFO	
FE	
PE	
RD	
VTK ◆	

	A ACTUAL	A MAX.	B ACTUAL	B MAX.
96"H ▪ 2 Top Shelves				
OVS2796 AS BUTT 4DWR	20¾"	25"	10⅛"	25⅜"
OVS3096 AS BUTT 4DWR	23¾"	28"	10⅛"	25⅜"
OVS3396 AS BUTT 4DWR	26¾"	31"	10⅛"	25⅜"
93"H ▪ 2 Top Shelves				
*OVS2793 AS BUTT 4DWR	20¾"	25"	10⅛"	25⅜"
*OVS3093 AS BUTT 4DWR	23¾"	28"	10⅛"	25⅜"
*OVS3393 AS BUTT 4DWR	26¾"	31"	10⅛"	25⅜"
*N/A for Value Built				
90"H ▪ 1 Top Shelf				
OVS2790 AS BUTT 4DWR ◆	20¾"	25"	9¾"	25"
OVS3090 AS BUTT 4DWR ◆	23¾"	28"	9¾"	25"
OVS3390 AS BUTT 4DWR ◆	26¾"	31"	9¾"	25"
84"H ▪ No Shelf				
OVS2784 BUTT 4DWR ◆	20¾"	25"	10⅛"	25⅜"
OVS3084 BUTT 4DWR ◆	23¾"	28"	10⅛"	25⅜"
OVS3384 BUTT 4DWR ◆	26¾"	31"	10⅛"	25⅜"

Double Oven Cabinet · 2 Butt Doors and 1 Drawer

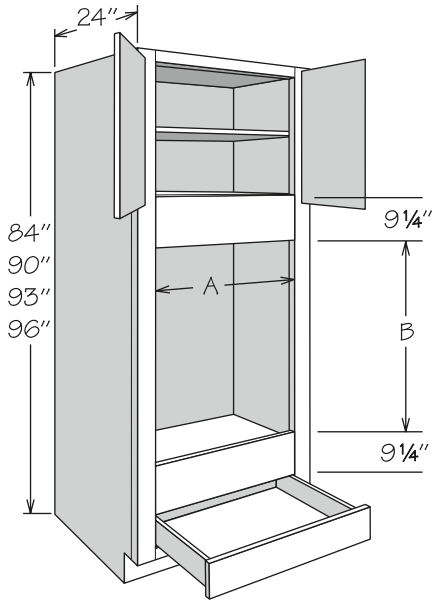

90" High Shown

- Cabinets indicated with an asterisk (*) are available for Portfolio Select and Portfolio Series only
- Features a solid back
- 3⅛" stiles
- One standard drawer
- All door styles feature face-mount hinges
- Shelf packaged separately for field installation
- Full-depth adjustable shelves and ¾" engineered wood and edge banded on front edge only
- 4" inset toe kick assembly shipped inside 93" and 96" high cabinets — 33" wide x 93" high toe kicks ship as two pieces - seam will be visible between toe kick box and side of cabinet
- Refer to appliance manufacturer's specifications for adequate clearances and required installation materials
- CCH and CCDW options are available on Portfolio Series only

PORTFOLIO SELECT & POTFOLIO	VALUE BUILT
AH	CFO
APC	RD
CCDW	VTK ◆
CCH	
CFO	
FE	
PE	
RD	
VTK ◆	

	A ACTUAL	A MAX.	B ACTUAL	B MAX.
96"H ▪ 2 Top Shelves				
OVD2796 AS BUTT	20¾"	25"	39"	54¼"
OVD3096 AS BUTT	23¾"	28"	39"	54¼"
OVD3396 AS BUTT	26¾"	31"	39"	54¼"
93"H ▪ 2 Top Shelves				
*OVD2793 AS BUTT	20¾"	25"	39"	54¼"
*OVD3093 AS BUTT	23¾"	28"	39"	54¼"
*OVD3393 AS BUTT *N/A for Value Built*	26¾"	31"	39"	54¼"
90"H ▪ 1 Top Shelf				
OVD2790 AS BUTT ◆	20¾"	25"	38⅝"	53⅞"
OVD3090 AS BUTT ◆	23¾"	28"	38⅝"	53⅞"
OVD3390 AS BUTT ◆	26¾"	31"	38⅝"	53⅞"
84"H ▪ No Shelf				
OVD2784 BUTT ◆	20¾"	25"	39"	54¼"
OVD3084 BUTT ◆	23¾"	28"	39"	54¼"
OVD3384 BUTT ◆	26¾"	31"	39"	54¼"

Double Oven Cabinet · 2 Butt Doors and 1 Large Drawer

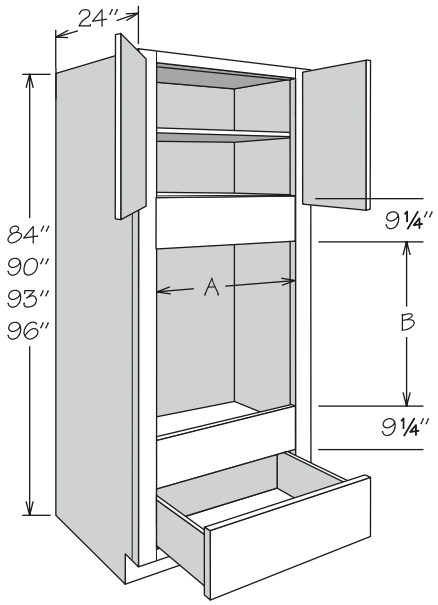

90" High Shown

- Cabinets indicated with an asterisk (*) are available for Portfolio Select and Portfolio Series only
- Features a solid back
- 3⅛" stiles
- All door styles feature face-mount hinges
- One large drawer
- Shelf packaged separately for field installation
- Full-depth adjustable shelves and ¾" engineered wood and edge banded on front edge only
- 4" inset toe kick assembly shipped inside 93" and 96" high cabinets — 33" wide x 93" high toe kicks ship as two pieces - seam will be visible between toe kick box and side of cabinet
- Refer to appliance manufacturer's specifications for adequate clearances and required installation materials
- CCH and CCDW options are available on Portfolio Series only

PORTFOLIO SELECT & POTFOLIO	VALUE BUILT
AH	CFO
APC	RD
CCDW	VTK ◆
CCH	
CFO	
FE	
PE	
RD	
VTK ◆	

	A ACTUAL	A MAX.	B ACTUAL	B MAX.
96"H ▪ 2 Top Shelves				
OVD2796 AS BUTT 1DDWR	20¾"	25"	33 9/16"	48 13/16"
OVD3096 AS BUTT 1DDWR	23¾"	28"	33 9/16"	48 13/16"
OVD3396 AS BUTT 1DDWR	26¾"	31"	33 9/16"	48 13/16"
93"H ▪ 2 Top Shelves				
*OVD2793 AS BUTT 1DDWR	20¾"	25"	33 9/16"	48 13/16"
*OVD3093 AS BUTT 1DDWR	23¾"	28"	33 9/16"	48 13/16"
*OVD3393 AS BUTT 1DDWR	26¾"	31"	33 9/16"	48 13/16"
*N/A for Value Built				
90"H ▪ 1 Top Shelf				
OVD2790 AS BUTT 1DDWR ◆	20¾"	25"	33 3/16"	48 7/16"
OVD3090 AS BUTT 1DDWR ◆	23¾"	28"	33 3/16"	48 7/16"
OVD3390 AS BUTT 1DDWR ◆	26¾"	31"	33 3/16"	48 7/16"
84"H ▪ No Shelf				
OVD2784 BUTT 1DDWR ◆	20¾"	25"	33 9/16"	48 13/16"
OVD3084 BUTT 1DDWR ◆	23¾"	28"	33 9/16"	48 13/16"
OVD3384 BUTT 1DDWR ◆	26¾"	31"	33 9/16"	48 13/16"

Double Oven Cabinet · 2 Butt Doors and 2 Drawers

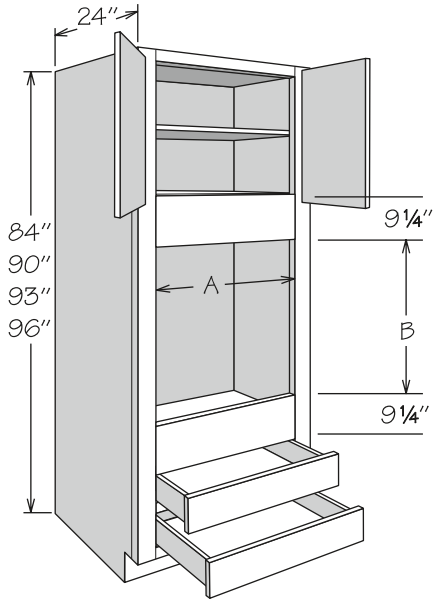

90" High Shown

- Cabinets indicated with an asterisk (*) are available for Portfolio Select and Portfolio Series only
- Features a solid back
- 3⅛" stiles
- All door styles feature face-mount hinges
- Two standard drawers
- Shelf packaged separately for field installation
- Full-depth adjustable shelves and ¾" engineered wood and edge banded on front edge only
- 4" inset toe kick assembly shipped inside 93" and 96" high cabinets — 33" wide x 93" high toe kicks ship as two pieces - seam will be visible between toe kick box and side of cabinet
- Refer to appliance manufacturer's specifications for adequate clearances and required installation materials
- CCH and CCDW options are available on Portfolio Series only

PORTFOLIO SELECT & POTFOLIO	VALUE BUILT
APC	CFO
CCDW	RD
CCH	VTK ◆
CFO	
FE	
PE	
RD	
VTK ◆	

	A ACTUAL	A MAX.	B ACTUAL	B MAX.
96"H ▪ 2 Top Shelves				
OVD2796 AS BUTT 2DWR	20¾"	25"	33"	48¼"
OVD3096 AS BUTT 2DWR	23¾"	28"	33"	48¼"
OVD3396 AS BUTT 2DWR	26¾"	31"	33"	48¼"
93"H ▪ 2 Top Shelves				
*OVD2793 AS BUTT 2DWR	20¾"	25"	33"	48¼"
*OVD3093 AS BUTT 2DWR	23¾"	28"	33"	48¼"
*OVD3393 AS BUTT 2DWR	26¾"	31"	33"	48¼"
*N/A for Value Built				
90"H ▪ 1 Top Shelf				
OVD2790 AS BUTT 2DWR ◆	20¾"	25"	32⅝"	47⅞"
OVD3090 AS BUTT 2DWR ◆	23¾"	28"	32⅝"	47⅞"
OVD3390 AS BUTT 2DWR ◆	26¾"	31"	32⅝"	47⅞"
84"H ▪ No Shelf				
OVD2784 BUTT 2DWR ◆	20¾"	25"	33"	48¼"
OVD3084 BUTT 2DWR ◆	23¾"	28"	33"	48¼"
OVD3384 BUTT 2DWR ◆	26¾"	31"	33"	48¼"

Oven Microwave Cabinet · 2 Butt Doors and 1 Drawer

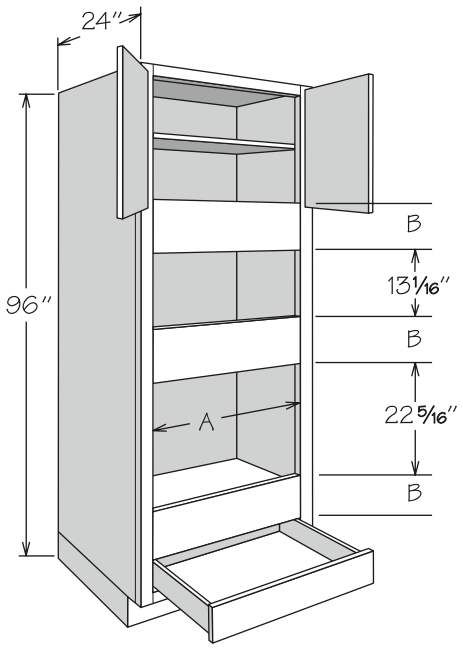

- Features a solid back
- 3⅛" stiles
- All doors feature face-mount hinges
- Features one standard drawer
- Shelving packaged separately for field installation
- 4" inset toe-kick assembly shipped as two pieces inside cabinet – seam will be visible between toe kick and side of cabinet
- For use with built-in style microwaves only
- Features one full-depth ¾" engineered wood shelf edge banded on front edge only (for top section)
- Refer to appliance manufacturer's specifications for adequate clearance and required installation materials
- CCH and CCDW options are available on Portfolio Series only

PORTFOLIO SELECT & POTFOLIO	VALUE BUILT
AH	CFO
APC	RD
CCDW	
CCH	
CFO	
FE	
PE	
RD	

	A ACTUAL	A MAX.	B ACTUAL	B MAX.
96"H ▪ 1 Top Shelf				
OMC3396 AS BUTT	26¾"	31"	9¼"	2¾"

Cabinet Tray Divider

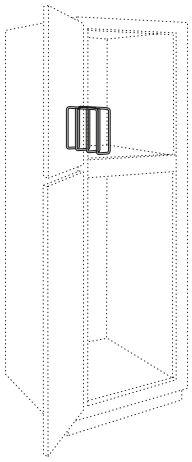

- Field installation accessory
- Chrome finish
- Mounting hardware included
- Overall dimensions: 2⅞" wide x 9¹⁵⁄₁₆" high x 11¾" deep
- Order Cabinet Tray Dividers individually
- For use in 24" deep cabinets or cabinets with RD-23 through RD-14

TD3

Adjustable Shelves

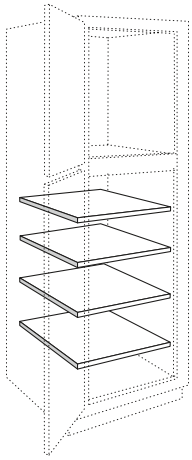

- Field installation accessory
- ¾" engineered wood
- Edge banded on front edge only
- CLIP LOCK shelf rests included

PORTFOLIO SELECT & POTFOLIO	VALUE BUILT
APC	MI
MI	RD
RD	

ADJUSTABLE SHELF

12" Deep

S1212
S1512
S1812
S2112
S2412
S3612

24" Deep

S1224
S1524
S1824
S2124
S2424
S2724
S3024
S3324
S3624

4 PACK SHELF KIT

12" Deep

SK1212
SK1512
SK1812
SK2112
SK2412
SK3612

24" Deep

SK1224
SK1524
SK1824
SK2124
SK2424
SK2724
SK3024
SK3324
SK3624

Sliding Shelves and Sliding Shelf Kits

PORTFOLIO SELECT & POTFOLIO	VALUE BUILT
CCSS	RD
RD	

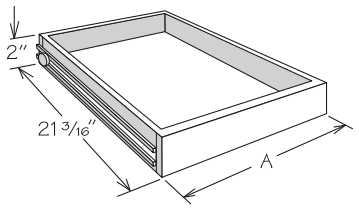

- Field installation accessory
- Engineered wood drawer with solid hardwood front, MDF bottom, and side-mounted drawer glides
- Includes sliding shelf, all glide hardware, and instructions

	OVEN SIZE
SSK24	OVS27
SSK27	OVS30
SSK30	OVS33

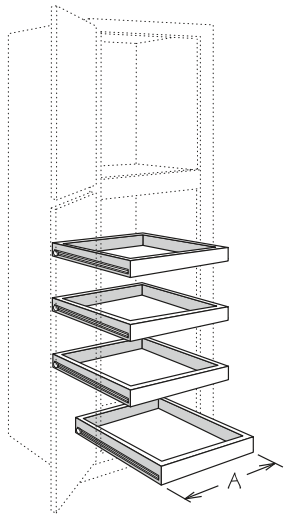

SLIDING SHELF KIT	4 PACK SLIDING SHELF KIT	A
SSK12	USS12-4K	8½"
SSK15	USS15-4K	11½"
SSK18	USS18-4K	14½"
SSK21	USS21-4K	17½"
SSK24	USS24-4K	20½"
SSK27	USS27-4K	23½"
SSK30	USS30-4K	26½"
SSK33	USS33-4K	29½"
SSK36	USS36-4K	32½"

Heat Shield Kit

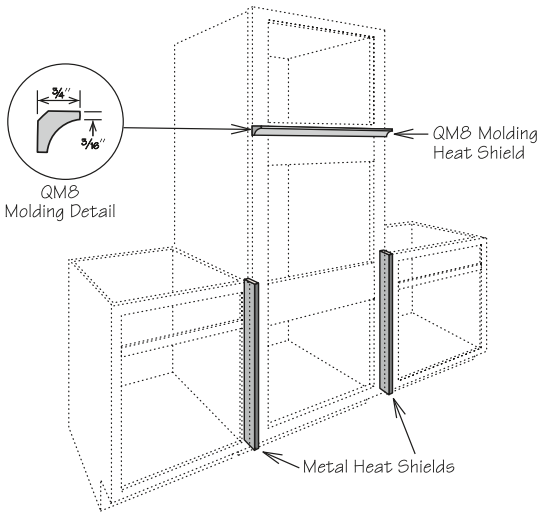

- Field installation accessory
- Recommended for Beckley and Canton Thermofoil door styles
- Protects doors and drawer fronts from adjacent heat source (built-in ovens, under counter ovens, drop-in or free-standing ranges)
- Kit features: Two 1/16" metal heat shields finished to match cabinet box exterior and one strip of QM8 finished to match cabinet box exterior

HSK

Notes

VANITY CABINETS

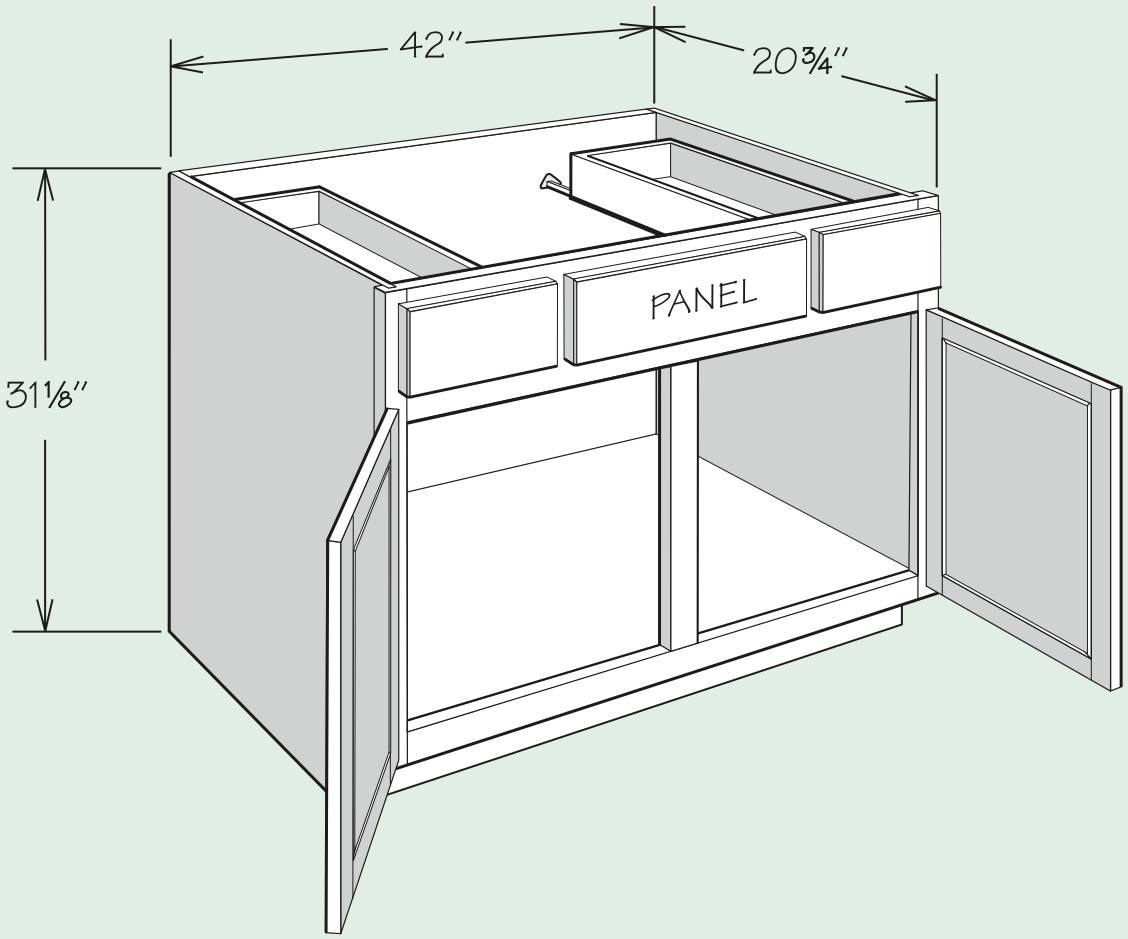

Vanity Base · 1 Door

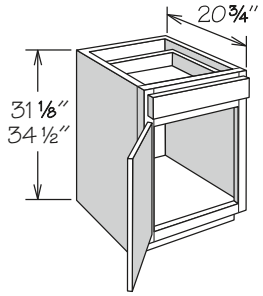

- No shelf
- Not drilled for adjustable shelf
- Door is hinged left and can be reversed in the field
- CCH and CCDW options are available on Portfolio Series only

PORTFOLIO SELECT & POTFOLIO	VALUE BUILT
AH ■	CFO
APC	RD
CCH	RTK
CCDW	
CFO	
FE	
PE	
RD	
RTK	

34½" HIGH
VB1234H ■
VB1534H ■
VB1834H ■
VB2134H ■

31⅛" HIGH
VB12
VB15
VB18
VB21

Vanity Base Cabinet · 1 Drawer and 1 Door with Wastebasket Pull-Out

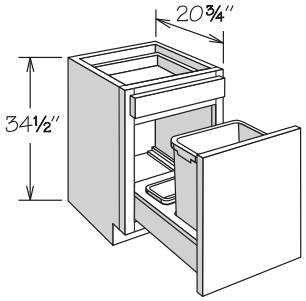

- Cabinets indicated with an asterisk (*) are available in Portfolio Select and Portfolio only
- Portfolio Select wastebasket pull-out now features heavy-duty full-extension CushionClose glides (132 pound rated)
- Portfolio and Value Built wastebasket pull-out features heavy-duty full-extension CushionClose glides (100 pound rated)
- Wastebasket rests in a natural finish wood frame
- Features one silver plastic 35-quart capacity bin and bag storage tray at rear (not dishwasher safe)
- Decorative hardware strongly recommended
- CCDW option is available on Portfolio Series only

PORTFOLIO SELECT & POTFOLIO	VALUE BUILT
AH	RTK
APC	
FE	
PE	
RTK	

34½" HIGH
*VWBB1834H
**N/A for Value Built*

Vanity Base · 2 Butt Doors and 1 Drawer

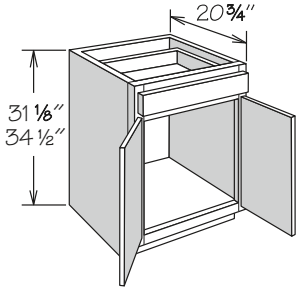

- No shelf
- Not drilled for adjustable shelf
- CCH and CCDW options are available on Portfolio Series only

PORTFOLIO SELECT & POTFOLIO	VALUE BUILT
AH ■	CFO
APC	RD
CCH	RTK
CCDW	
CFO	
FE	
PE	
RD	
RTK	

34½" HIGH
VB2434H BUTT ■
VB2734H BUTT ■
VB3034H BUTT ■
VB3334H BUTT ■
VB3634H BUTT ■

31⅛" HIGH
VB24 BUTT
VB27 BUTT
VB30 BUTT
VB33 BUTT
VB36 BUTT

Vanity Full-Height Base · 1 Door

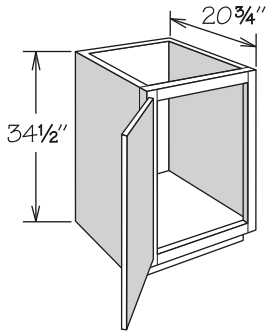

- Full-height door
- No shelf
- Not drilled for adjustable shelf
- Door is hinged left and can be reversed in the field
- CCH option is available on Portfolio Series only

PORTFOLIO SELECT & POTFOLIO	VALUE BUILT
AH	CFO
APC	RD
CCH	RTK
CFO	
FE	
PE	
RD	
RTK	

34½" HIGH

VB1234H FH
VB1534H FH
VB1834H FH
VB2134H FH

Vanity Full-Height Base · 2 Butt Doors

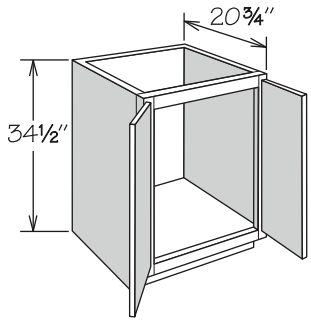

- Full-height doors
- No shelf
- Not drilled for adjustable shelf
- CCH option is available on Portfolio Series only

PORTFOLIO SELECT & POTFOLIO	VALUE BUILT
AH	CFO
APC	RD
CCH	RTK
CFO	
FE	
PE	
RD	
RTK	

34½" HIGH

VB2434H BUTT FH
VB3034H BUTT FH
VB3634H BUTT FH

Vanity Drawer Base

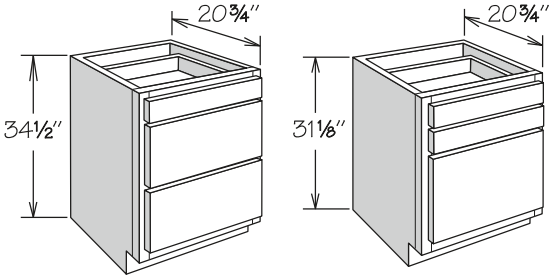

- VDB_34H features one standard and two large drawers
- VDB_ features one large and two standard drawers
- CCDW option is available on Portfolio Series only

PORTFOLIO SELECT & POTFOLIO	VALUE BUILT
AH ■	CFO
APC	RD
CCDW	RTK
CFO	
FE	
PE	
RD	
RTK	

34½" HIGH

VDB1234H ■
VDB1534H ■
VDB1834H ■
VDB2134H ■
VDB2434H ■

31⅛" HIGH

VDB12
VDB15
VDB18
VDB21
VDB24

Vanity Sink Base · 1 Door

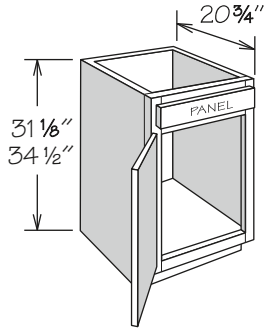

- No shelf
- Subtract 1½" from depth and width for available sink bowl opening
- Door is hinged left and can be reversed in the field
- CCH option is available on Portfolio Series only

PORTFOLIO SELECT & POTFOLIO	VALUE BUILT
AH ■	CFO
APC	RD
CCH	RTK
CFO	
FE	
PE	
RD	
RTK	

34½" HIGH

VSB1534H ■
VSB1834H ■
VSB2134H ■

31⅛" HIGH

VSB15
VSB18
VSB21

Vanity Sink Base · 2 Butt Doors

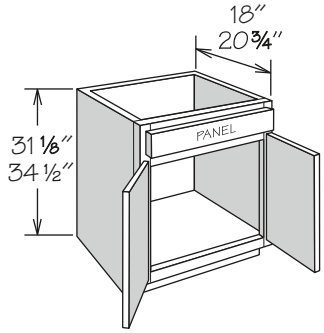

- No shelf
- Subtract 1½" from depth and width for available sink bowl opening
- CCH option is available on Portfolio Series only

PORTFOLIO SELECT & POTFOLIO	VALUE BUILT
AH ■	CFO
APC	RD
CCH	RTK
CFO	
FE	
PE	
RD	
RTK	

34½" HIGH

20¾" Deep

VSB2434H BUTT ■
VSB2734H BUTT ■
VSB3034H BUTT ■
VSB3334H BUTT ■
VSB3634H BUTT ■

18" Deep

VSB241834H BUTT
VSB301834H BUTT
VSB361834H BUTT

31⅛" HIGH

20¾" Deep

VSB24 BUTT
VSB27 BUTT
VSB30 BUTT
VSB33 BUTT
VSB36 BUTT

18" Deep

VSB2418 BUTT
VSB3018 BUTT
VSB3618 BUTT

Vanity Sink Base · 2 Doors

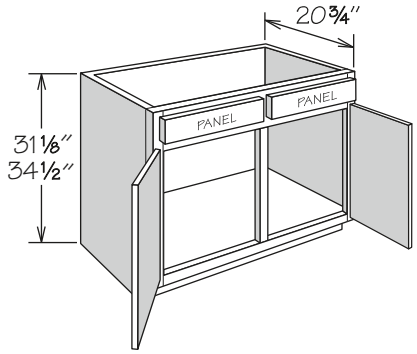

- No shelf
- Subtract 1½" from depth and width for available sink bowl opening
- CCH option is available on Portfolio Series only

PORTFOLIO SELECT & POTFOLIO	VALUE BUILT
AH ■	CFO
APC	RD
CCH	RTK
CFO	
FE	
PE	
RD	
RTK	

34½" HIGH

VSB3934H ■
VSB4234H ■

31⅛" HIGH

VSB39
VSB42

Vanity Sink Base · 3 Doors

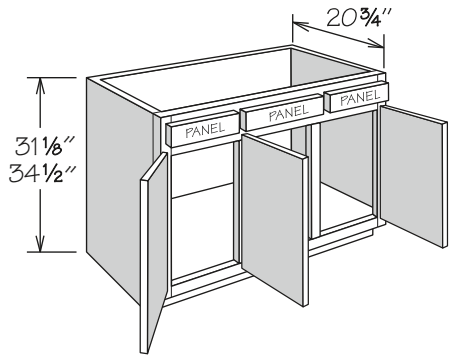

- No shelf
- Subtract 1½" from depth and width for available sink bowl opening
- Hinged as shown – can be reversed in the field
- CCH option is available on Portfolio Series only

PORTFOLIO SELECT & POTFOLIO	VALUE BUILT
AH ■	CFO
APC	RD
CCH	RTK
CFO	
FE	
PE	
RD	
RTK	

34½" HIGH
VSB4834H ■

31⅛" HIGH
VSB48

Vanity Sink Base · 4 Butt Doors

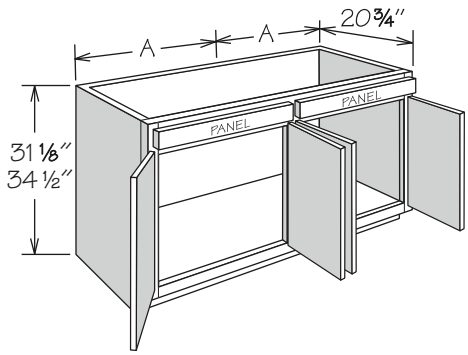

- No shelf
- Subtract 1½" from depth and each dimension A for available sink bowl openings
- CCH option is available on Portfolio Series only

PORTFOLIO SELECT & POTFOLIO	VALUE BUILT
AH ■	CFO
APC	RD
CCH	RTK
CFO	
FE	
PE	
RD	
RTK	

34½" HIGH	A	31⅛" HIGH	A
VSB5434H BUTT ■	27"	VSB54 BUTT	27"
VSB6034H BUTT ■	30"	VSB60 BUTT	30"

Vanity Sink Base · 2 Butt Doors and 2 Drawers

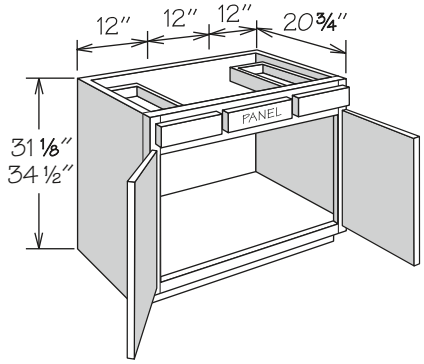

- No shelf
- Top drawer on each side of sink bowl opening
- Subtract 1½" from depth for available sink bowl opening
- Features two DRB9_ to accommodate sink bowl opening up to 18"
- CCH and CCDW options are available on Portfolio Series only

PORTFOLIO SELECT & POTFOLIO	VALUE BUILT
AH ■	CFO
APC	RD
CCH	RTK
CCDW	
CFO	
FE	
PE	
RD	
RTK	

34½" HIGH
VAN3634H BUTT ■

31⅛" HIGH
VAN36 BUTT

Vanity Sink Base · 2 Doors and 2 Drawers

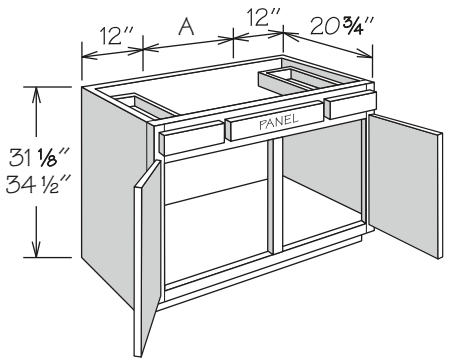

- No shelf
- Top drawer on each side of sink bowl opening
- Subtract 1½" from depth for available sink bowl opening
- CCH and CCDW options are available on Portfolio Series only

PORTFOLIO SELECT & POTFOLIO	VALUE BUILT
AH ■	CFO
APC	RD
CCH	RTK
CCDW	
CFO	
FE	
PE	
RD	
RTK	

34½" HIGH	A	MAX. SINK OPENING
VAN3934H ■	15"	18"
VAN4234H ■	18"	21"

31⅛" HIGH	A	MAX. SINK OPENING
VAN39	15"	18"
VAN42	18"	21"

Vanity Sink Base · 3 Doors and 2 Drawers

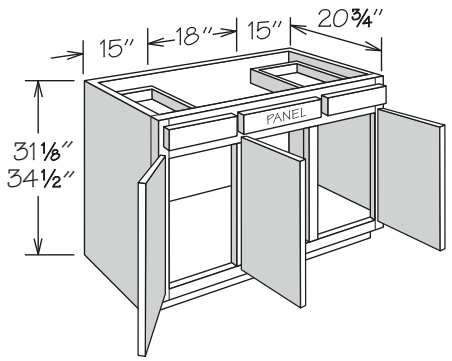

- No shelf
- Top drawer on each side of sink bowl opening
- Subtract 1½" from depth for available sink bowl opening
- Hinged as shown – can be reversed in the field
- Maximum sink bowl opening is 21" wide
- CCH and CCDW options are available on Portfolio Series only

PORTFOLIO SELECT & POTFOLIO	VALUE BUILT
AH ■	CFO
APC	RD
CCH	RTK
CCDW	
CFO	
FE	
PE	
RD	
RTK	

34½" HIGH
VAN4834H ■

31⅛" HIGH
VAN48

Vanity Sink Base · 4 Butt Doors and 2 Drawers

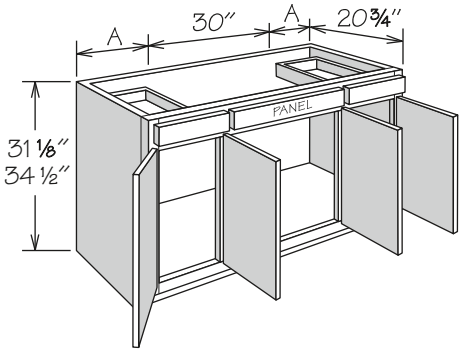

- No shelf
- Top drawer on each side of sink bowl opening
- Subtract 1½" from depth for available sink bowl opening
- Maximum sink bowl opening is 33" wide
- CCH and CCDW options are available on Portfolio Series only

PORTFOLIO SELECT & POTFOLIO	VALUE BUILT
AH ■	CFO
APC	RD
CCH	RTK
CCDW	
CFO	
FE	
PE	
RD	
RTK	

34½" HIGH	A
VAN5434H BK BUTT ■	12"
VAN6034H BK BUTT ■	15"

31⅛" HIGH	A
VAN54 BK BUTT	12"
VAN60 BK BUTT	15"

Vanity Combo Sink Base · 1 Door and 2 Drawers

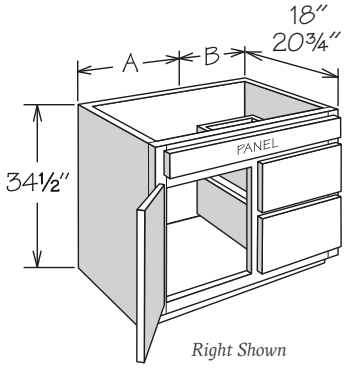

Right Shown

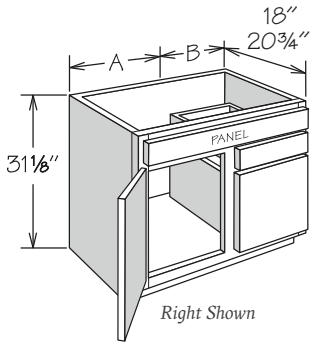

Right Shown

- No shelf
- Allow for plumbing placement to clear drawers
- Drawers available on right or left side (please specify)
- Cabinet shown is right indicating drawers on the right side of the cabinet
- Subtract 1½" from depth and overall cabinet width for available sink bowl opening
- CCH and CCDW options are available on Portfolio Series only

PORTFOLIO SELECT & POTFOLIO	VALUE BUILT
AH ■	CFO
APC	RD
CCH	RTK
CCDW	
CFO	
FE	
PE	
RD	
RTK	

34½" HIGH	A	B
20¾" Deep		
VSDB2434H BK ■	12"	12"
VSDB2734H BK ■	15"	12"
VSDB3034H BK ■	18"	12"
VSDB3334H BK ■	21"	12"
VSDB3634H BK ■	21"	15"
18" Deep		
VSDB241834H BK	12"	12"
VSDB271834H BK	15"	12"
VSDB301834H BK	18"	12"
VSDB331834H BK	21"	12"
VSDB361834H BK	21"	15"

31⅛" HIGH	A	B
20¾" Deep		
VSDB24 BK	12"	12"
VSDB27 BK	15"	12"
VSDB30 BK	18"	12"
VSDB33 BK	21"	12"
VSDB36 BK	21"	15"
18" Deep		
VSDB2418 BK	12"	12"
VSDB2718 BK	15"	12"
VSDB3018 BK	18"	12"
VSDB3318 BK	21"	12"
VSDB3618 BK	21"	15"

Vanity Combo Sink Base · 1 Door and 2 Drawers

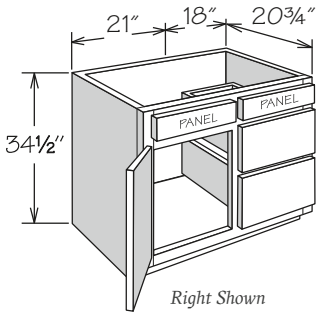

Right Shown

- No shelf
- Allow for plumbing placement to clear drawers
- Drawers available on right or left side (please specify)
- Cabinet shown is right indicating drawers on the right side of the cabinet
- Subtract 1½" from depth and overall cabinet width for available sink bowl opening
- CCH and CCDW options are available on Portfolio Series only

PORTFOLIO SELECT & POTFOLIO	VALUE BUILT
AH ■	CFO
APC	RD
CCH	RTK
CCDW	
CFO	
FE	
PE	
RD	
RTK	

34½" HIGH
VSDB3934H BK

Vanity Combo Sink Base · 2 Butt Doors and 3 Drawers

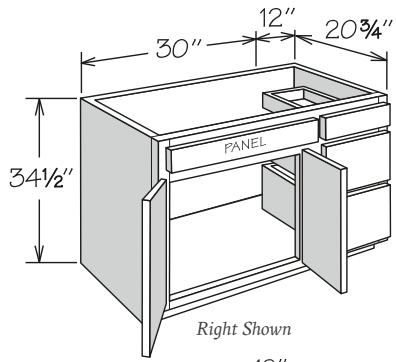

Right Shown

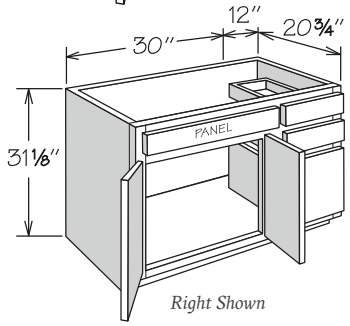

Right Shown

- No shelf
- Drawers available on right or left side (please specify)
- Cabinet shown is right indicating drawers on the right side of the cabinet
- Maximum sink bowl opening is 28½" wide
- Requires off center sink bowl opening
- CCH and CCDW options are available on Portfolio Series only

PORTFOLIO SELECT & POTFOLIO	VALUE BUILT
AH ■	CFO
APC	RD
CCH	RTK
CCDW	
CFO	
FE	
PE	
RD	
RTK	

34½" HIGH
VSDB4234H BK BUTT ■

31⅛" HIGH
VSDB42 BK BUTT

Vanity Combo Sink Base · 2 Butt Doors and 6 Drawers

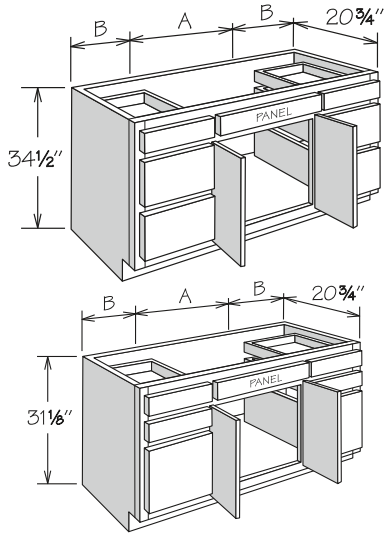

- No shelf
- Subtract 1½" from depth and dimension A for available sink bowl opening
- CCH and CCDW optionsare available on Portfolio Series only

PORTFOLIO SELECT & POTFOLIO	VALUE BUILT
AH ■	CFO
APC	RD
CCH	RTK
CCDW	
CFO	
FE	
PE	
RD	
RTK	

34½" HIGH	A	B
VSDB4834HD BK BUTT ■	24"	12"
VSDB5434HD BK BUTT ■	24"	15"
VSDB6034HD BK BUTT ■	30"	15"

31⅛" HIGH	A	B
VSDB48D BK BUTT	24"	12"
VSDB54D BK BUTT	24"	15"
VSDB60D BK BUTT	30"	15"

Vanity Combo Sink Base · 4 Butt Doors and 3 Drawers

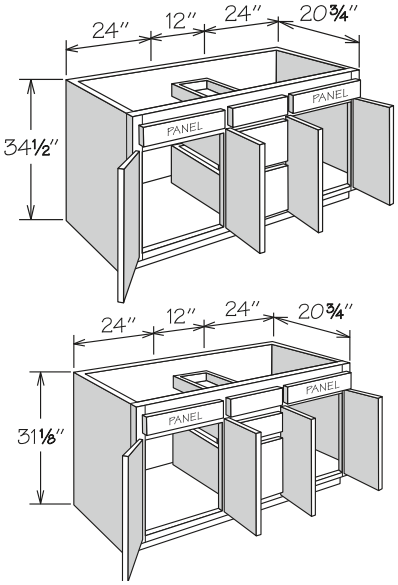

- No shelf
- Subtract 1½" from depth and each 24" dimension for available sink bowl openings
- CCH and CCDW optionsare available on Portfolio Series only

PORTFOLIO SELECT & POTFOLIO	VALUE BUILT
AH ■	CFO
APC	RD
CCH	RTK
CCDW	
CFO	
FE	
PE	
RD	
RTK	

34½" HIGH
VSDB6034HC BK BUTT ■

31⅛" HIGH
VSDB60C BK BUTT

Vanity Sink Base · Vanity Plumbing Skirt

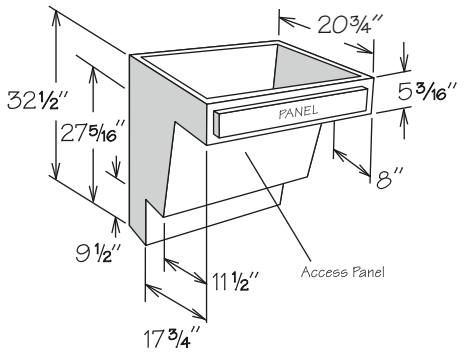

- Features kneehole drawer front - refer to door style section
- Cabinets indicated with an asterisk (*) are available for Portfolio Select and Portfolio only
- Removable front access panel attached with 4 sets of DDF Fasteners (DDF FASTENER qty 2)
- Removable front access panel
- Subtract 1½" from width and depth for available sink bowl opening
- Maximum available height inside cabinet for sink bowl is 5"
- Water lines, drains, and P-Trap must be installed at 6" maximum from wall
- Refer to sink manufacturer's specifications for adequate clearance and required installation materials
- Matching toe kick includedd
- Must be installed between two cabinets or a cabinet and a wall
- May be used with Vanity Adaptable Sink Base Kit (ASB) — Ordered separately

PORTFOLIO SELECT & POTFOLIO
APC
FE

32½" HIGH
*VPS30 UD
*VPS36 UD
N/A for Value Built

Vanity · Adaptable Sink Base

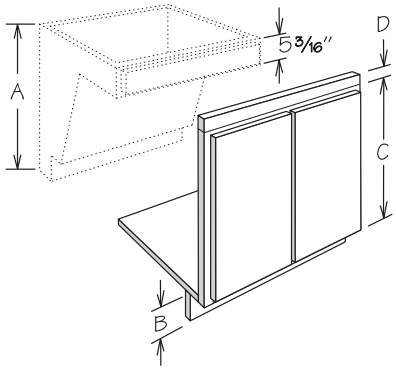

- Cabinets indicated with an asterisk (*) are available for Portfolio Select and Portfolio only
- For use with Vanity Plumbing Skirt (VPS) - MUST be ordered separately
- Kit contains:
  - » Face frame with hinged butt doors
  - » One Tall Filler (S3S396)
  - » Four sets of Drawer Front Fasteners (DDF FASTENER qty 2)
  - » One Sink Floor (FL36)
  - » One Hardwood Cleat (HWC 2X4X96)
  - » Installation instructions
- Features CushionClose hinges standard for all door styles
- Kit must be assembled in the field

A VPS	B DESIRED TOE KICK HEIGHT	C FACE FRAME HEIGHT	D S3S TRIMMED	KIT
32½"	2"	24½"	13/16"	ASB_34 KIT
32½"	4"	20⅝"	2 11/16"	ASB_32 KIT

20 ⅝" Frame
*ASB3032 KIT
*ASB3632 KIT
*N/A for Value Built

24 ½" Frame
*ASB3034 KIT
*ASB3634 KIT
*N/A for Value Built

Vanity Sink Front

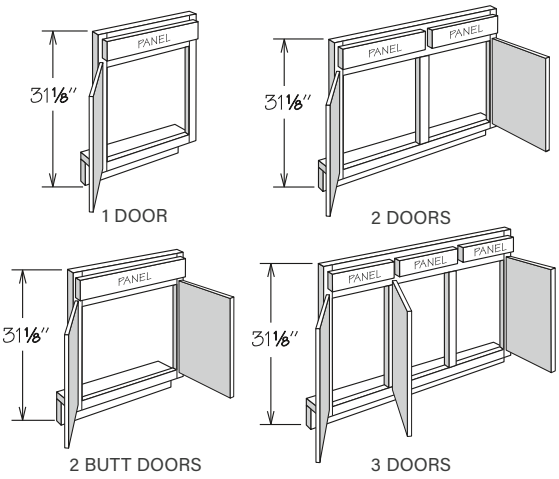

PORTFOLIO SELECT & POTFOLIO: CCH

- Not trimmable
- Order floor and returns separately (field trimming may be required) – refer to Panel Section for availability (page 173)
- VSF48 hinged as shown, can be reversed in field
- CCH option is available on Portfolio Series only

31⅛" HIGH

1 Door
VSF21

2 Butt Doors
VSF24 BUTT
VSF30 BUTT
VSF36 BUTT

2 Doors
VSF39
VSF42

3 Doors
VSF48

Valet Cabinet · 2 Butt Doors

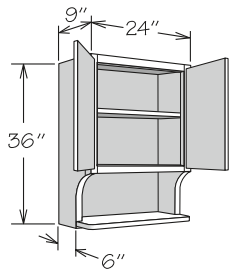

PORTFOLIO SELECT & POTFOLIO: CCH

- Matching interior standard
- Flush sides with no face frame or ¼" reveals
- Bottom opening: 22½" x 10⅞"
- Features a fixed shelf
- Sides and bottom shelf feature ¾" engineered wood veneered on both sides
- CCH option is available on Portfolio Series only

36" HIGH
VC2436 BUTT

Medicine Cabinet · 1 Door

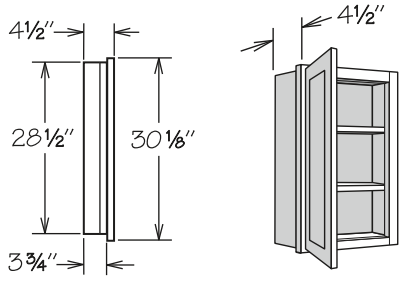

- Two adjustable engineered wood shelves
- Surface or recess mount
- MCM1530 features a mirrored door
- For surface mount installation of wood door styles, trim and apply WEP30 (order separately) to match finish on exterior sides to cabinet frame
- Painted Pewter, Duraform/Painted Linen and Thermofoil White door styles feature Matching Interior standard

28½" HIGH	RECESS MOUNT CUTOUT WIDTH	RECESS MOUNT CUTOUT HEIGHT
MC1530	14½"	28½"
MCM1530	14½"	28½"

Kneehole Drawer Cabinet

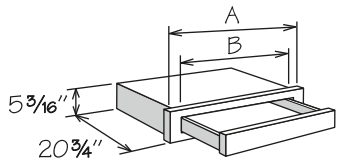

- Designed for desk or vanity application
- Field trimmable in height to 4¾"
- Field trimmable in depth to 18" or available with RD-20 through RD-12
- Drawer front complements door style - refer to door style section
- CCDW option is available on Portfolio Series only

PORTFOLIO SELECT & POTFOLIO	VALUE BUILT
CCDW	RD
RD	

	A	B	MAX. TRIM
KDC27/21	27"	17¾"	21" (3" each side)
KDC33/27	33"	23¾"	27" (3" each side)
KDC36/33	36"	29¾"	33" (1½" each side)

Furniture Drawer Cabinet · 1 Drawer

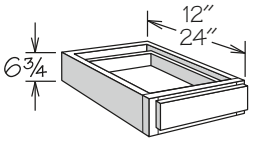

6" HIGH

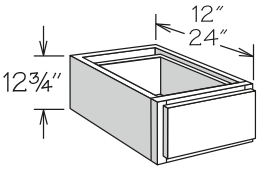

12" HIGH

- 6" high features one standard drawer and 12" high features one large drawer
- 24" deep Furniture Drawer cabinets are only available with RD-23 through RD-13
- Bottom of cabinet frame must be fully supported
- CCDW option is available on Portfolio Series only

PORTFOLIO SELECT & POTFOLIO	VALUE BUILT
APC	CFO
CCDW	RD ■
CFO	
FE	
PE	
RD ■	

6" HIGH • 1 DRAWER

12" Deep	24" Deep
FD121206	FD122406 ■
FD151206	FD152406 ■
FD181206	FD182406 ■
FD211206	FD212406 ■
FD241206	FD242406 ■
FD271206	FD272406 ■
FD301206	FD302406 ■
FD331206	FD332406 ■
FD361206	FD362406 ■

12" HIGH • 1 DRAWER

12" Deep	24" Deep
FD121212	FD122412 ■
FD151212	FD152412 ■
FD181212	FD182412 ■
FD211212	FD212412 ■
FD241212	FD242412 ■
FD271212	FD272412 ■
FD301212	FD302412 ■
FD331212	FD332412 ■
FD361212	FD362412 ■

Desk End Panel

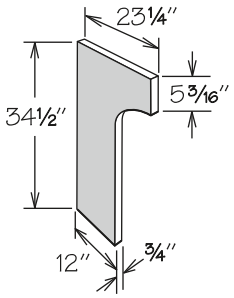

- All door styles feature ¾" veneered engineered wood finished to match cabinet box exterior on both sides
- Recommend QM8 be ordered for installation to ensure proper attachment to wall
- Field trimmable
- Edge banded on front

34½" HIGH

DEP

Stainless Tilt-Out Tray Kit

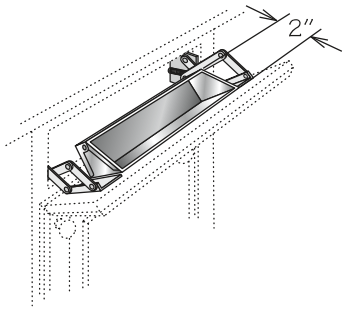

- Field installation accessory
- Kit features tray and one pair of scissor hinges
- For use on existing drawer panels for 20¾" or 18" deep vanity cabinets
- Tilt-out hinges install inside of frame opening and require 1¼" of clearance per side

STO TRAY 11	STO TRAY 14	STO TRAY 22
VSB18	VSB21__	VSB30__ BUTT
VSB48__ ◆	VSB24__ (BUTT)	VSB33__ BUTT
VAN48__	VSB27__ BUTT	VSB36__ BUTT
VSDB30__ BK ■	VSDB33__ BUTT* ■	VAN54__ BK BUTT
VSDB39__ BK ▲	VSDB36__ BUTT* ■	VAN60__ BK BUTT
	VSDB39__ ■	VSDB42__ BK BUTT
	VSDB48__D BK BUTT ■	VSDB60__D BK BUTT
	VSDB54__D BK BUTT ■	VSB60__ BUTT (2 required)
	VSB42 (2 required)	
	VSB54__ BUTT (2 required)	
	VSDB60__C BK BUTT (2 required)	
	VSB39 (2 required)	

■ Above Doors Only
◆ Above Center Doors Only
▲ Above Drawers Only

**Vertical frame rail continues behind drawer front, tilt-out tray only placable above door*

	A
STO TRAY 11	11½"
STO TRAY 14	14½"
STO TRAY 22	22"

Vanity Linen Cabinet

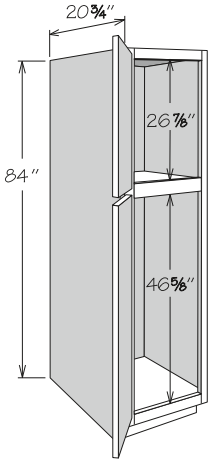

2 DOORS

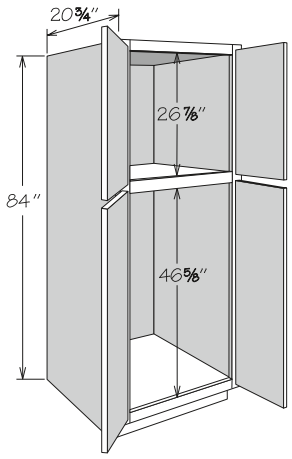

4 BUTT DOORS

- Shelving and optional interior accessories may be ordered separately (refer to vanity linen cabinet accessories for details)
- Cabinet backs are pre-drilled to accept up to four sliding shelves in lower section
- Two door cabinets must be ordered hinged left or right
- Specialty Door cabinets (SD) feature Matching Interior standard and require a specialty door selection
- Bottom doors have a center rail for select door styles - refer to door style section
- CCH option is available on Portfolio Series only

PORTFOLIO SELECT & POTFOLIO	VALUE BUILT
APC	CFO
CCH	MI ■
CFO	RD
FE	
MI ■	
PE	
RD	

2 DOORS

VLC122184 ■
VLC152184 ■
VLC182184 ■
VLC122184 SD
VLC152184 SD
VLC182184 SD

4 BUTT DOORS

VLC242184 BUTT ■
VLC242184 BUTT SD

Vanity Linen Cabinet · with Adjustable Shelves

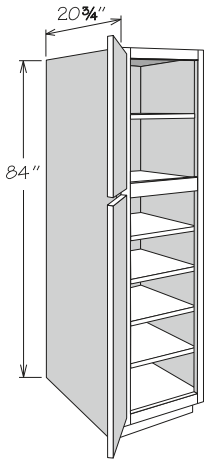

2 DOORS

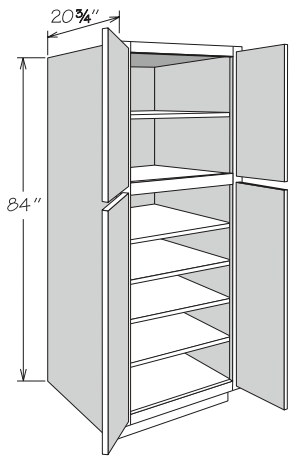

4 BUTT DOORS

- Features one full-depth adjustable shelf in top section and four full-depth adjustable shelves in lower section
- Full-depth adjustable shelves are ¾" engineered wood and edge banded on front edge only
- All shelving packaged separately
- Two door cabinets must be ordered hinged left or right
- Specialty Door cabinets (SD) feature Matching Interior standard and require a specialty door selection
- Bottom doors have a center rail for select door styles - refer to door style section
- CCH option is available on Portfolio Series only

PORTFOLIO SELECT & POTFOLIO	VALUE BUILT
APC	MI ■
CCH	RD
FE	
MI ■	
PE	
RD	

2 DOORS

VLC122184 AS ■
VLC152184 AS ■
VLC182184 AS ■
VLC122184 AS SD
VLC152184 AS SD
VLC182184 AS SD

4 BUTT DOORS

VLC242184 AS BUTT ■
VLC242184 AS BUTT SD

Vanity Linen Cabinet · with Sliding Shelves

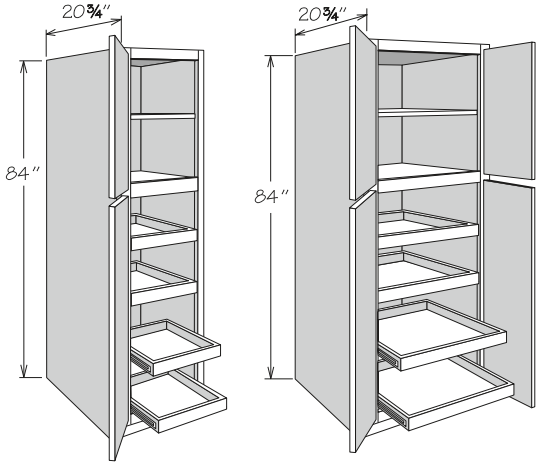

2 DOORS 4 BUTT DOORS

- Features one full-depth adjustable shelf in top section and four sliding shelves in lower section
- Full-depth adjustable shelf is ¾" engineered wood and edge banded on front edge only
- Adjustable shelf and sliding shelves packaged separately
- Engineered wood sliding shelves included for all construction types
- Two door cabinets must be ordered hinged left or right
- Specialty Door cabinets (SD) feature Matching Interior standard and require a specialty door selection
- Bottom doors have a center rail for select door styles - refer to door style section
- CCH option is available on Portfolio Series only

PORTFOLIO SELECT & POTFOLIO	VALUE BUILT
APC	MI ■
CCH	RD
CCSS	
FE	
MI ■	
PE	
RD	

2 DOORS

VLC122184 4SSK ■
VLC152184 4SSK ■
VLC182184 4SSK ■
VLC122184 4SSK SD
VLC152184 4SSK SD
VLC182184 4SSK SD

4 BUTT DOORS

VLC242184 4SSK BUTT ■
VLC242184 4SSK BUTT SD

Vanity Linen Cabinet · Adjustable Shelves

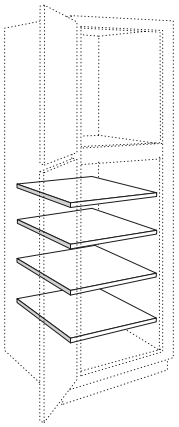

- Field installation accessory
- ¾" engineered wood
- Edge banded on front edge only
- CLIP LOCK shelf rests included

PORTFOLIO SELECT & POTFOLIO	VALUE BUILT
APC	MI
MI	RD
RD	

ADJUSTABLE SHELF

S1221
S1521
S1821
S2421

4 PACK SHELF KIT

SK1221
SK1521
SK1821
SK2421

Vanity Linen Cabinet · Sliding Shelves

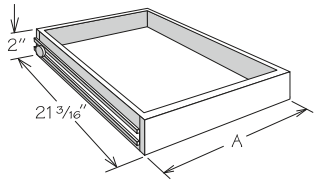

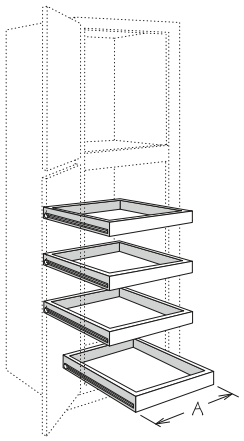

- Field installation accessory
- Engineered wood sliding shelves with solid hardwood front, MDF bottom, and side-mounted drawer glides
- Includes sliding shelf, all glide hardware, and instructions

PORTFOLIO SELECT & POTFOLIO	VALUE BUILT
CCSS	RD
RD	

SLIDING SHELF KIT	4 PACK SLIDING SHELF KIT	A
SSK1221	USS1221-4K	8½"
SSK1521	USS1521-4K	11½"
SSK1821	USS1821-4K	14½"
SSK2421	USS2421-4K	20½"

MOLDING & DECORATIVE ACCENTS

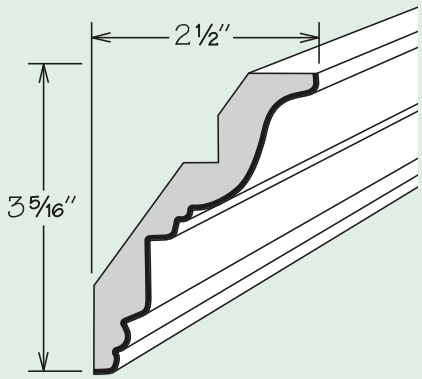

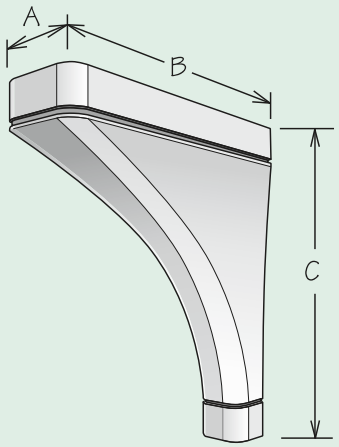

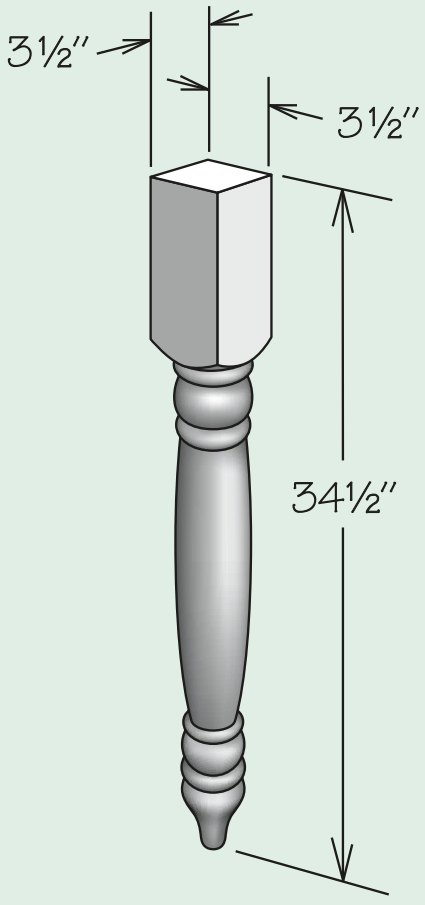

Crown Molding

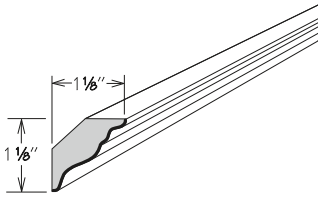

SOFFIT

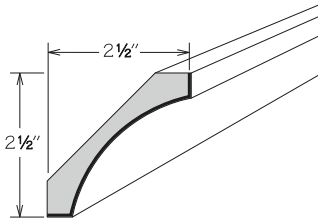

SMALL COVE

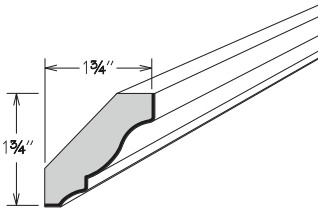

CROWN

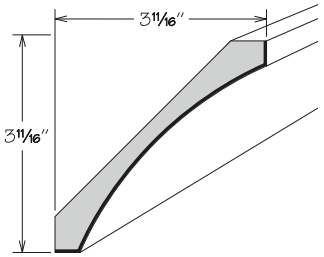

LARGE COVE

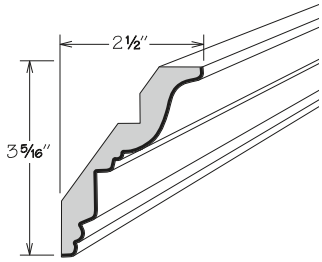

TRADITIONAL CLASSIC

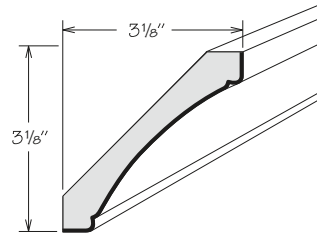

DECORATIVE COVE

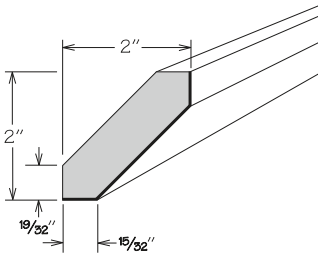

ANGLE

- 94" long
- Wood and Painted finishes feature solid wood finished to match cabinet box exterior - glazed finishes on CM8, DSCVM8, LCM8, SCM8 and TCCM8 will be glazed
- Duraform Espresso, Harbor, Linen, Stone, and Thermofoil finishes:
  - » Feature Duraform wrapped MDF for SCM8, CM8, TCCM8, and ACM8
  - » Feature solid wood finished to match cabinet box exterior for SCVM8, LCVM8, and DCVM8
- TCCM8 may use OGE8, SBIM8, or SIM8 as accent
- Bold line indicates finished surfaces

SOFFIT
SCM8

SMALL COVE
SCVM8

CROWN
CM8

LARGE COVE
LCVM8

TRADITIONAL CLASSIC
TCCM8

DECORATIVE COVE
DCVM8

ANGLE
ACM8

Edge Molding

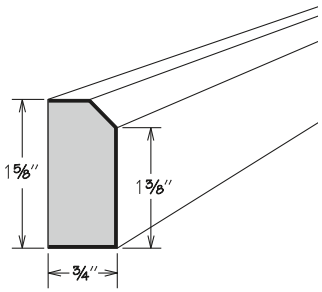

CONTEMPORARY TRIM

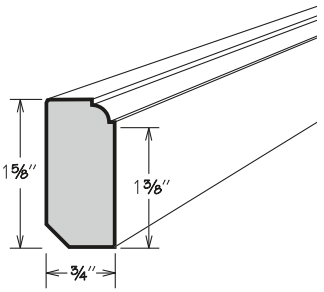

DECORATIVE TRIM

- 94" long
- All finishes feature solid wood finished to match cabinet box exterior for CTM8 and DCTM8 - glazed finishes on DTCM8 will be glazed
- Can be used as light rail molding (cleating may be required)
- Bold line indicates finished surfaces

CONTEMPORARY TRIM
CTM8

DECORATIVE TRIM
DCTM8

Inset Molding

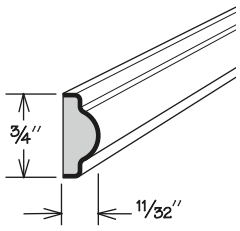

SINGLE BEAD

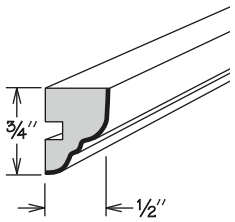

OGEE

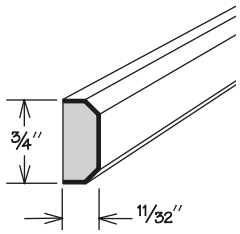

SHAKER

- 94" long
- All finishes feature solid wood finished to match cabinet box exterior - glazed finishes on OGE8 and SBIM8 will be glazed
- May be used as accent on TCCM8 and ILR8
- Bold line indicates finished surfaces

SINGLE BEAD
SBIM8

OGEE
OGE8

SHAKER
SIM8

Mirror Molding

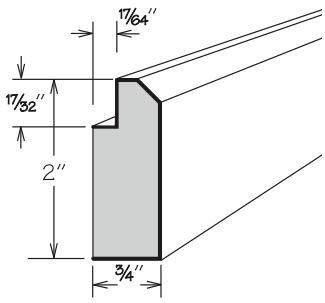

SHAKER

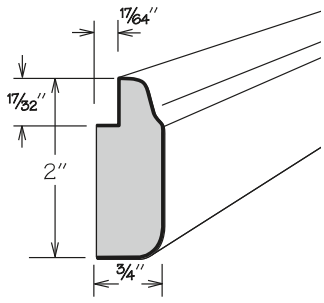

MIRROR

- 94" long
- All finishes feature solid wood finished to match cabinet box exterior - glazed finishes on MM8 will be glazed
- Bold line indicates finished surfaces

SHAKER
SMM8

MIRROR
MM8

Chair Rail and Specialty Molding

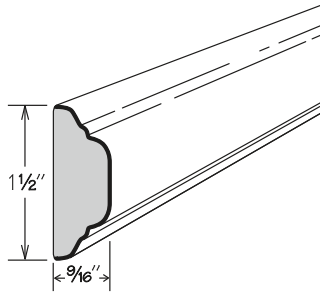

CHAIR RAIL

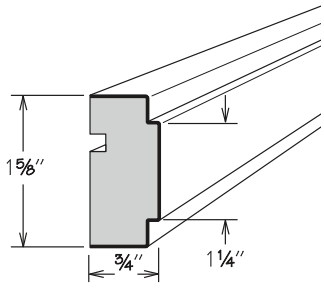

SQUARE CHAIR RAIL

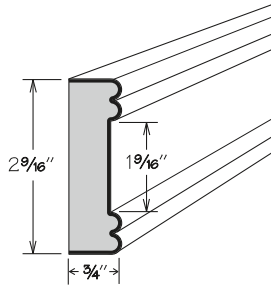

LIBRARY

- 94" long
- All finishes feature solid wood finished to match cabinet box exterior
- May be used as vertical decorative molding (i.e. seams between bookshelves or in lieu of an overlay filler)
- Bold line indicates finished surfaces

CHAIR RAIL
CR8

SQUARE CHAIR RAIL
SQCR8

LIBRARY
LBM8

Light Rail Molding

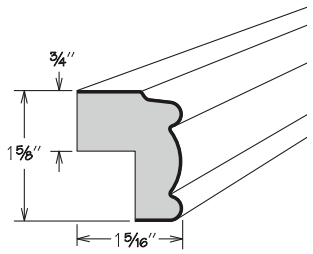

SMALL TRADITIONAL

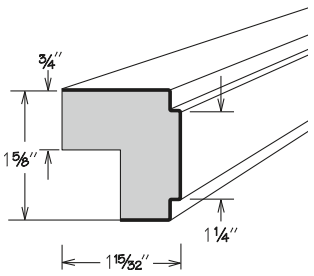

SQUARE

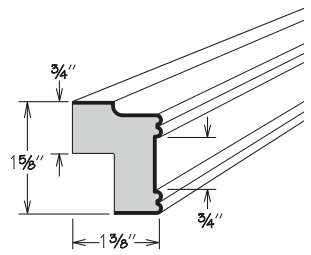

INSET

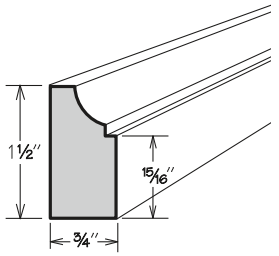

CLASSIC TRIM

- 94" long
- All finishes feature solid wood finished to match cabinet box exterior - glazed finishes on ILR8, STLR8 and SQLR8 will be glazed
- ILR8 and LBM8 may use SBIM8 or SIM8 as accent
- CLTM8 can be used as light rail or edge molding (cleating may be required when used as light rail)
- Bold line indicates finished surfaces

SMALL TRADITIONAL
STLR8

SQUARE
SQLR8

INSET
ILR8

CLASSIC TRIM
CLTM8

Base Molding

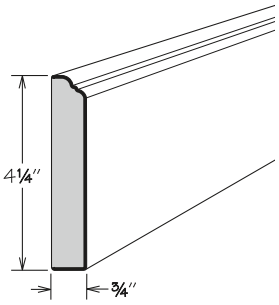

OGEE PILASTER

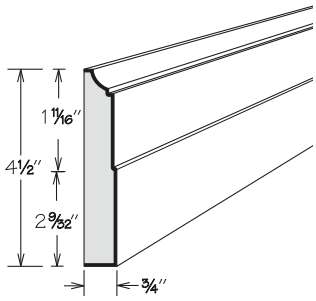

CLASSIC BASEBOARD

- 94" long
- Wood and Painted finishes feature solid wood finished to match cabinet box exterior - glazed finishes will be glazed
- Duraform Espresso, Harbor, Linen, Stone, and Thermofoil door styles:
  - » Feature Duraform wrapped MDF finished to match cabinet box exterior for OGP8
  - » Feature solid wood finished to match exterior cabinet box exterior for CLBM8
- For use with furniture toe or top molding applications
- Bold line indicates finished surfaces

OGEE PILASTER
OGP8

CLASSIC BASEBOARD
CLBM8

Molding Stock

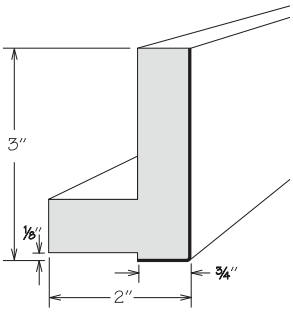

STARTER

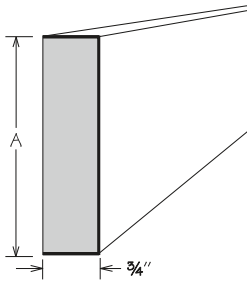

3-SIDED

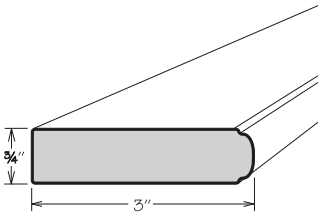

SINGLE BEAD

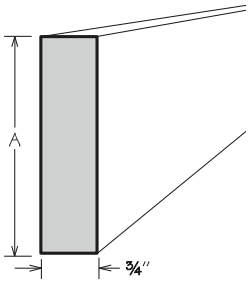

4-SIDED

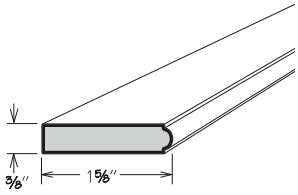

SMALL SINGLE BEAD

- All finishes feature solid wood finished to match cabinet box exterior - glazed finishes on SBM8 and SSBM8 will be glazed for STRM8, S3S396, S3S696, S4S396, S4S696, SBM8, and SSBM8
- 3-Sided and 4-Sided Stock may also be used in vertical applications (as a filler) or horizontal applications (as furniture toe)
- Bold line indicates finished surfaces

	LENGTH
STARTER	
STRM8	94"
SINGLE BEAD	
SBM8	94"
SMALL SINGLE BEAD	
SSBM8	94"

	LENGTH
3-SIDED	
S3S396	96"
S3S696	96"
4-SIDED	
S4S396	96"
S4S696	96"

Accent Molding

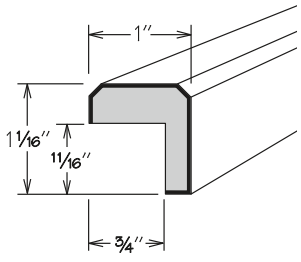

SHAKER

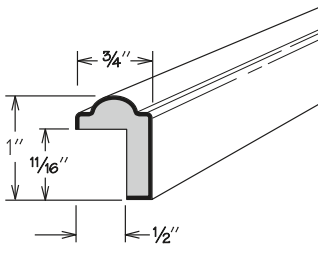

SINGLE BEAD

- 94" long
- All finishes feature solid wood finished to match cabinet box exterior - glazed finishes on SBAM8 will be glazed
- May be used as accent on Wine Storage and Base Microwave cabinets
- Bold line indicates finished surfaces

SHAKER	SINGLE BEAD
SAM8	SBAM8

Trim Molding

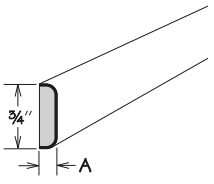

BATTEN

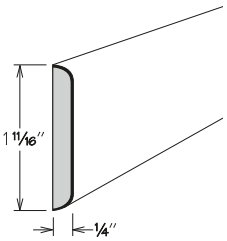

WIDE BATTEN

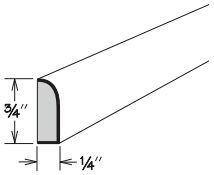

SCRIBE

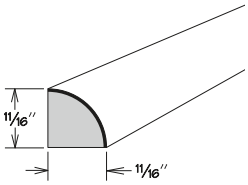

QUARTER ROUND

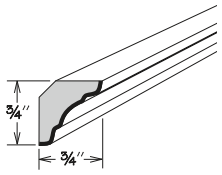

DECORATIVE INSIDE CORNER

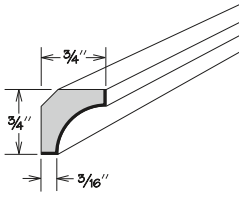

INSIDE CORNER

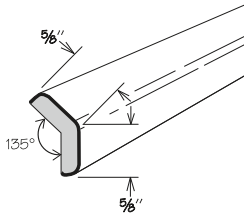

ANGLED OUTSIDE CORNER

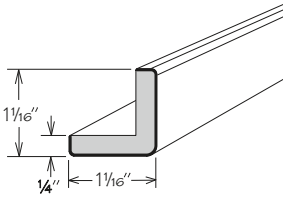

OUTSIDE CORNER

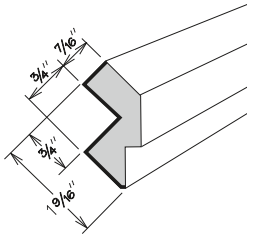

CABINET ANGLE

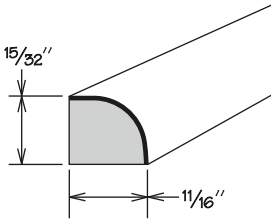

SHOE

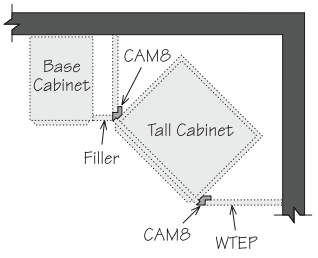

Top View

- All finishes feature solid wood finished to match cabinet box exterior for BM8, SM8, SM10, ICM8, AOSC8, CAM8, WBM8, QR8, QM8, and OTCM8 - glazed finishes on ICM8 will be glazed
- Cabinet Angle Molding (CAM8):
  - » Can be used in corner application to place cabinet at 45° angle
  - » Cannot be installed on cabinets with the Furniture Ends Option (FE)
- Bold line indicates finished surfaces

	A	LENGTH
BATTEN		
BM8	3/16"	94"
SCRIBE		
SM8	—	94"
SM10	—	120"
DECORATIVE INSIDE CORNER		
ICM8	—	94"
ANGLED OUTSIDE CORNER		
AOSC8	—	94"
CABINET ANGLE		
CAM8	—	94"

	LENGTH
WIDE BATTEN	
WBM8	94"
QUARTER ROUND	
QR8	94"
INSIDE CORNER	
QM8	94"
OUTSIDE CORNER	
OTCM8	94"
SHOE	
SHM8	94"

Builder Trim Molding

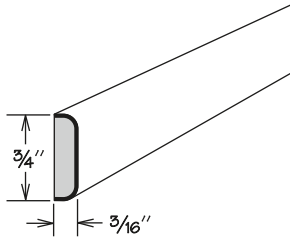

BATTEN

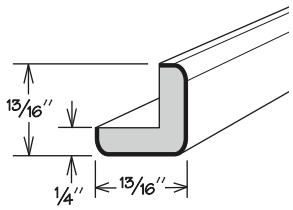

OUTSIDE CORNER

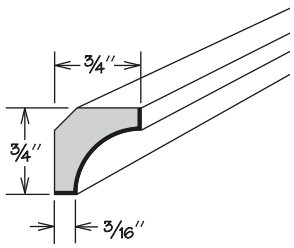

INSIDE CORNER

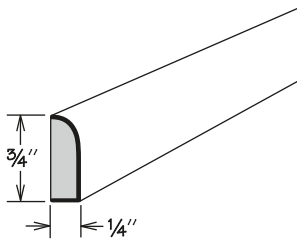

SCRIBE

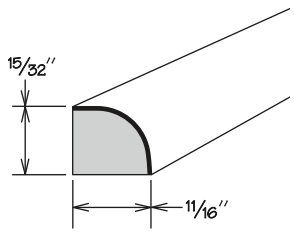

SHOE

- All finishes feature stained, painted, or laminate wrapped hardwood or MDF finished to match cabinet box exterior
- Bold line indicates finished surfaces

	LENGTH
BATTEN	
BM8 BLD	94"
INSIDE CORNER	
QM8 BLD	94"
SHOE	
SHM8 BLD	94"

	LENGTH
OUTSIDE CORNER	
OCM8 BLD	94"
SCRIBE	
SM8 BLD	96"

Builder Crown Molding

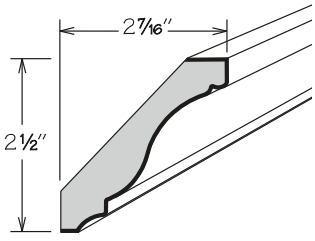

LARGE CROWN

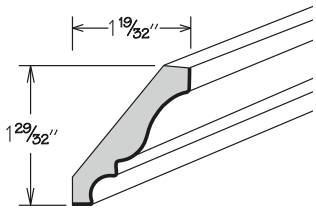

CROWN

- 94" long
- All finishes feature stained, painted, or laminate wrapped hardwood or MDF finished to match cabinet box exterior - glazed finishes will be glazed
- Bold line indicates finished surfaces

LARGE CROWN
LCM8 BLD

CROWN
CM8 BLD

Arched Valance

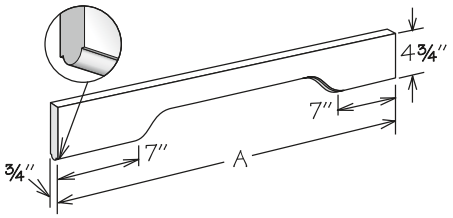

- Field trimmable
- All door styles feature solid wood finished to match cabinet box exterior
- Dimension from height of arch to top of valance is 2⅛"

	A	MAX. TRIM (6⅛" each end)
V36 AR	36¼"	24"
V48 AR	48¼"	36"
V60 AR	60¼"	48"
V72 AR	72¼"	60"

Crown Valance

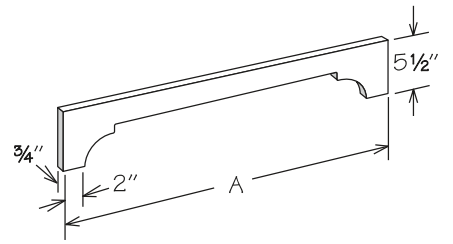

- Field trimmable
- All door styles feature solid wood finished to match cabinet box exterior
- Dimension from height of arch to top of valance is 2¼"

	A	MAX. TRIM (1½" each end)
V30 CR	30¼"	27¼"
V36 CR	36¼"	33¼"
V42 CR	42¼"	39¼"
V48 CR	48¼"	45¼"

Flat Panel Arched Valance

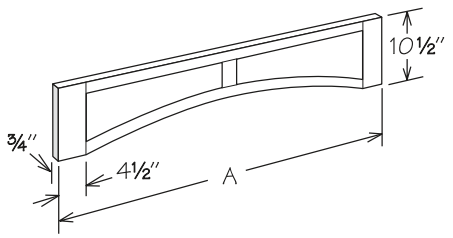

- Field trimmable
- All door styles feature solid wood finished to match cabinet box exterior - glazed finishes will be glazed
- Dimension from height of arch to top of valance is 8½"

	A	MAX. TRIM (3" each end)	NUMBER OF PANELS
V36 FP	36"	30"	2
V42 FP	42"	36"	2
V48 FP	48"	42"	2
V54 FP	54"	48"	3

Raised Panel Arched Valance

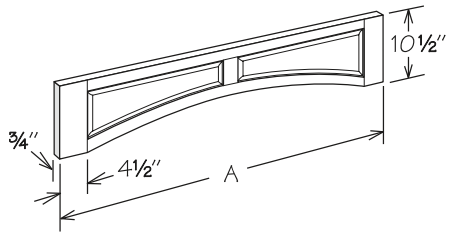

- Field trimmable
- All door styles feature solid wood finished to match cabinet box exterior - glazed finishes will be glazed
- Dimension from height of arch to top of valance is 8½"

	A	MAX. TRIM (3" each end)	NUMBER OF PANELS
V36 RP	36"	30"	2
V42 RP	42"	36"	2
V48 RP	48"	42"	2
V54 RP	54"	48"	3

Shaker Valance

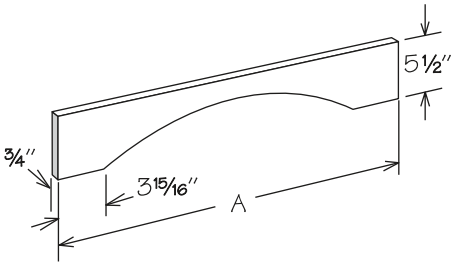

- Field trimmable
- All door styles feature solid wood finished to match cabinet box exterior
- Dimension from height of arch to top of valance is 2¼"

	A	MAX. TRIM (3⅛" each end)
V30 SH	30¼"	24"
V36 SH	36¼"	30"
V42 SH	42¼"	36"
V48 SH	48¼"	42"
V60 SH	60¼"	54"
V72 SH	72¼"	66"

Straight Valance

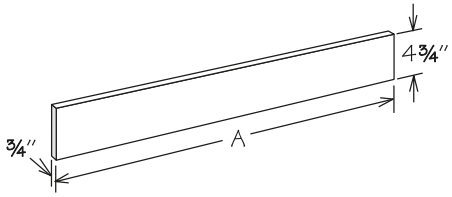

- Field trimmable
- All door styles feature solid wood finished to match cabinet box exterior

	A
V48 S	48¼"
V72 S	72¼"

Traditional Valance

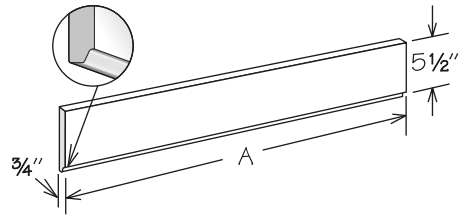

- Field trimmable
- All door styles feature solid wood finished to match cabinet box exterior - glazed finishes will be glazed

	A
V36 T	36¼"
V72 T	72¼"
V96 T	96¼"

Angled Corbel

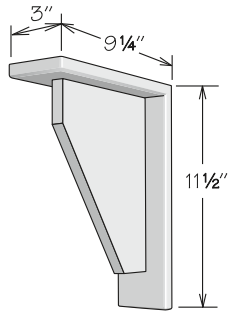

ANGLED

- All door styles feature ⅝″ solid wood finished to match cabinet box exterior - glazed finishes will be glazed
- For decorative use only

AS12

Curved Corbel

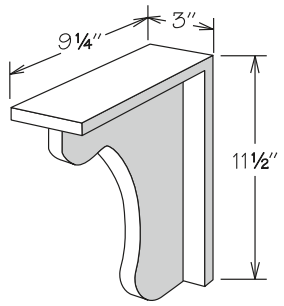

CURVED

- All door styles feature ⅝″ solid wood finished to match cabinet box exterior - glazed finishes will be glazed
- For decorative use only

CS12

Classic Corbels NEW! PRODUCT

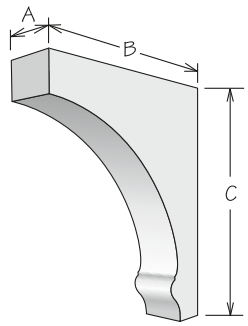

- All door styles feature solid wood finished to match cabinet box exterior
- Recessed mounting clips included
- For decorative use only

	A	B	C
CLC29	2"	5"	9"
CLC212	2"	9"	12"

Era Corbels NEW! PRODUCT

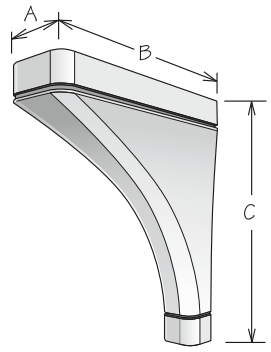

- All door styles feature solid wood finished to match cabinet box exterior
- Recessed mounting clips included
- For decorative use only

	A	B	C
ERC49	4¼"	5"	9"
ERC312	3"	9"	12"

Cove Corbels

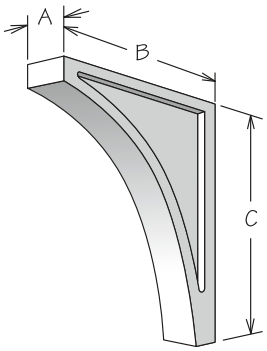

- All door styles feature solid wood finished to match cabinet box exterior - glazed finishes will be glazed
- Recessed mounting clips included
- For decorative use only

	A	B	C
CC29	1¾"	6"	9"
CC49	4"	5"	9"
CC212	1¾"	8"	12"

Prairie Corbels

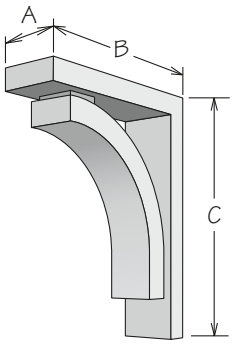

- All door styles feature solid wood finished to match cabinet box exterior
- Recessed mounting clips included
- For decorative use only

	A	B	C
PC36	3"	3"	6"
PC49	4"	5"	9"
PC312	2⅞"	9"	12"

Metal Cove Corbel

NEW! FINISH

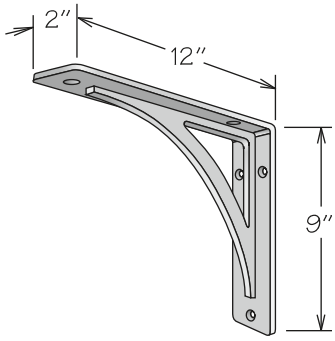

- Mounting clips included
- Can be installed using either height orientation
- Will support up to 100 lbs. when installed per included installation instructions

	FINISH
METAL COVE 212 BG	Brushed Gold
METAL COVE 212 VB	Verona Bronze
METAL COVE 212 MB	Matte Black
METAL COVE 212 SN	Satin Nickel

Metal Emerson Corbel

NEW! FINISH

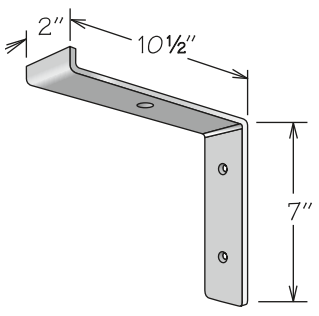

- Mounting clips included
- Will support up to 100 lbs. when installed per included installation instructions

	FINISH
METAL EMERSON 27 BG	Brushed Gold
METAL EMERSON 27 VB	Verona Bronze
METAL EMERSON 27 MB	Matte Black
METAL EMERSON 27 SN	Satin Nickel

Aria Legs and Foot

NEW! PRODUCT

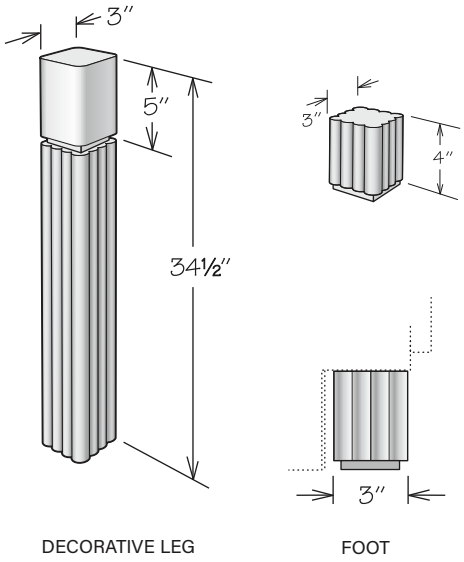

DECORATIVE LEG FOOT

- All door styles feature solid wood finished to match cabinet box exterior
- Leg is field trimmable
- Recommend ordering Table Skirting Furniture Bracket (TSFB) separately for decorative leg installation

DECORATIVE LEG	FOOT
ARDL	ARDF

Era Legs and Foot

NEW! PRODUCT

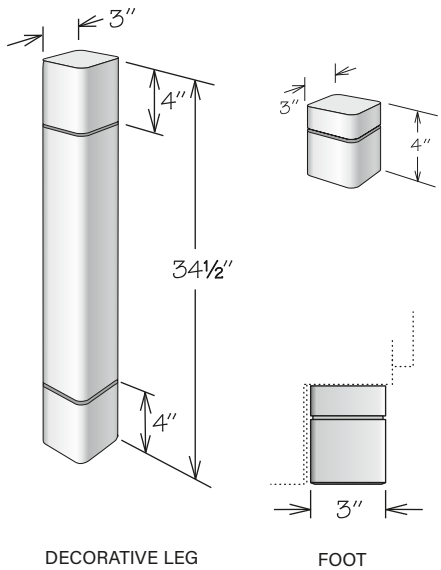

DECORATIVE LEG FOOT

- All door styles feature solid wood finished to match cabinet box exterior
- Leg is field trimmable
- Recommend ordering Table Skirting Furniture Bracket (TSFB) separately for decorative leg installation

DECORATIVE LEG	FOOT
ERDL	ERDF

Base Tapered Leg and Foot

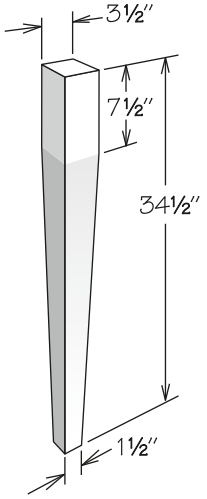

LEG

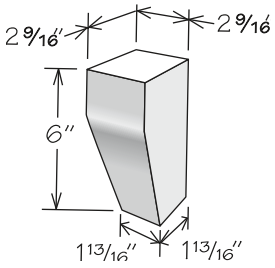

FOOT

- All door styles feature solid wood finished to match cabinet box exterior
- Base Tapered Leg is tapered on all sides and is field trimmable
- Base Tapered Foot is tapered on two sides and is field trimmable to 4" high
- Recommend ordering Table Skirting Furniture Bracket (TSFB) separately for decorative leg installation

LEG	FOOT
BTPL	TPF

Base Turned Leg and Feet

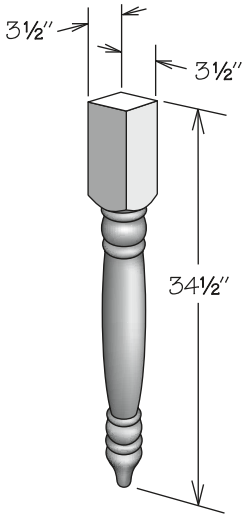

LEG

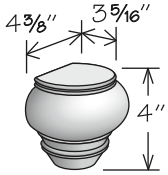

FOOT

- All door styles feature solid wood finished to match cabinet box exterior - glazed finishes will be glazed
- Base Turned Leg is field trimmable to 28 1/2" high
- Recommend ordering Table Skirting Furniture Bracket (TSFB) separately for decorative leg installation

LEG	FOOT
BTL	ATF

Base Square Leg and Foot

NEW! SIZE

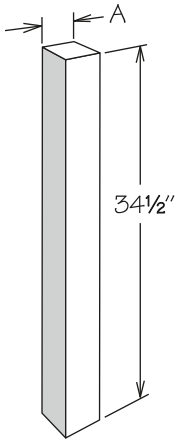

LEG

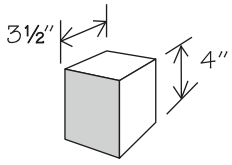

FOOT

- All door styles feature solid wood finished to match cabinet box exterior
- Base Square Leg is field trimmable
- Recommend ordering Table Skirting Furniture Bracket (TSFB) separately for decorative leg installation

DECORATIVE LEG	A	FOOT
BSQL	3½"	BSQF
BSQL5	4½"	
	-	

Chantilly Legs and Foot

NEW! SIZE

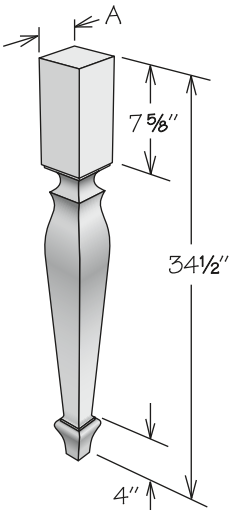

DECORATIVE LEG

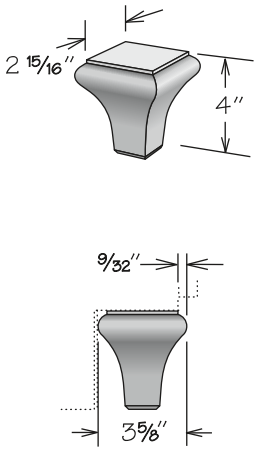

FOOT

- All door styles feature solid wood finished to match cabinet box exterior - glazed finishes will be glazed
- Legs are field trimmable
- Recommend ordering Table Skirting Furniture Bracket (TSFB) separately for decorative leg installation

DECORATIVE LEGS	A
CDL	3½"
CDL5	4½"

FOOT
CDF

Parker Legs and Foot

NEW! SIZE

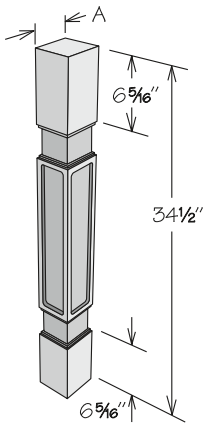

DECORATIVE LEG

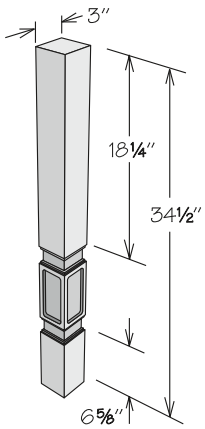

FURNITURE LEG

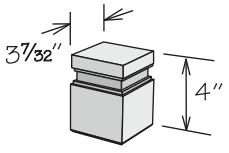

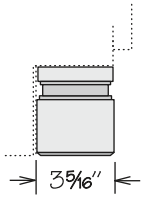

FOOT

- All door styles feature solid wood finished to match cabinet box exterior - glazed finishes will be glazed
- Legs are field trimmable
- Recommend ordering Table Skirting Furniture Bracket (TSFB) separately for decorative leg installation

DECORATIVE LEG	A
PDL	3½"
PDL5	4½"

FURNITURE LEG
PFL

FOOT
PDF

Split Post

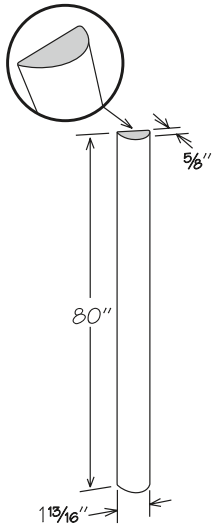

- All door styles feature solid wood finished to match cabinet box exterior
- Field trimmable
- Use with Traditional Split Block to create design element
- Must be mounted to a Universal Filler (order separately)

SPLIT POST
SPLT POST80 P

Traditional Split Block

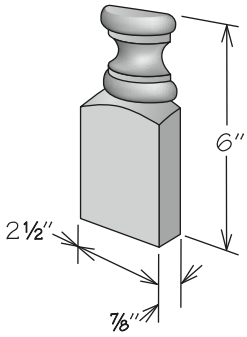

- All door styles feature solid wood finished to match cabinet box exterior - glazed finishes will be glazed
- For floor or wall application
- Use with Split Post to create design element
- Must be mounted to a Universal Filler (order separately)

SPLIT BLOCK
SPLT BLOCK26 T

SUGGESTED DESIGN APPLICATIONS

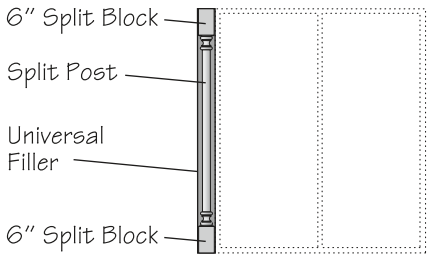

Wall Cabinet

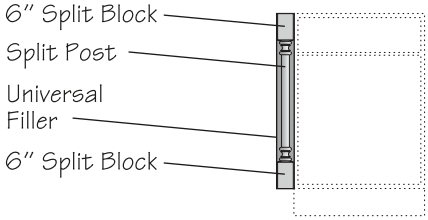

Base Cabinet

Notes

PANELS, FILLERS & INSTALLATION ITEMS

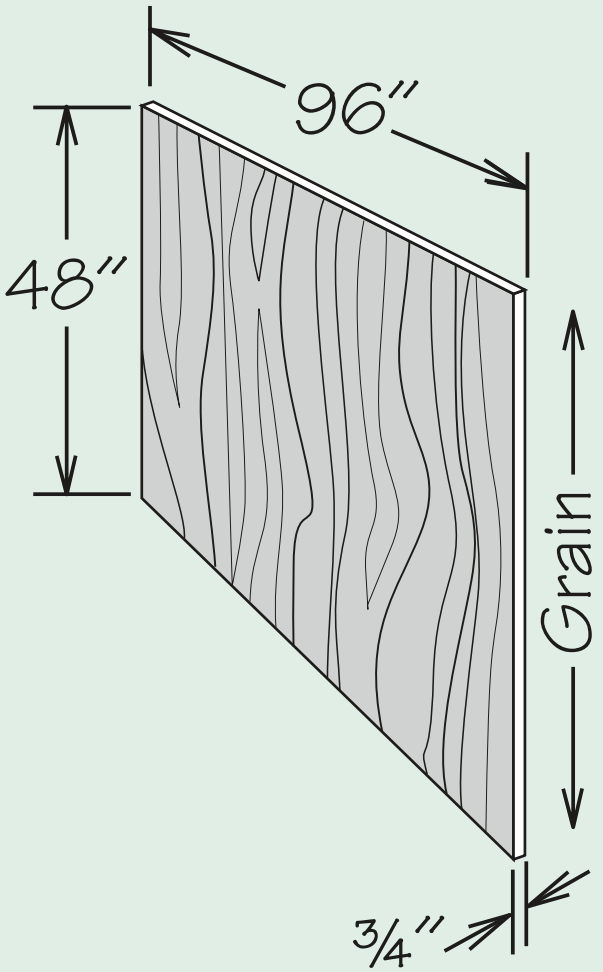

Desk End Panel

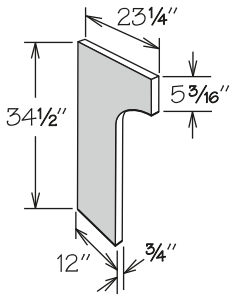

- All door styles feature ¾" veneered engineered wood finished to match cabinet box exterior on both sides
- Recommend QM8 be ordered for installation to ensure proper attachment to wall
- Field trimmable
- Edge banded on front

DEP

Dishwasher Return

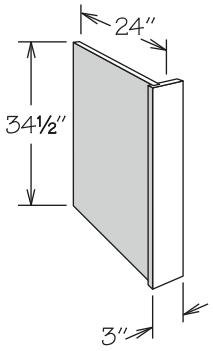

- Reversible for left or right installation
- Solid wood front
- All door styles feature ½" engineered wood with outside finished to match cabinet exterior and inside with a natural woodgrain look
- Wall attachment block included
- Field trimmable to 1" in width
- Can be notched for toe kick in the field

PORTFOLIO SELECT & POTFOLIO
APC
FE
PE

DWR3

Refrigerator Return · ½" Panel

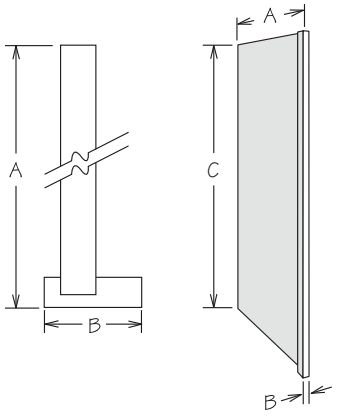

- Reversible for left or right installation
- Solid wood front
- 24" Deep Refrigerator Returns feature ½" engineered wood with outside finished to match cabinet exterior and inside with a natural woodgrain look
- 32" Deep Refrigerator Returns feature ½" plywood finished on outside to match cabinet exterior and interiors with a natural woodgrain look
- Front filler can be trimmed to a minimum of 1" wide
- Field trimmable in height, can be notched for toe kick

PORTFOLIO SELECT & POTFOLIO	VALUE BUILT
APC ◆	MI
FE	RD ■
MI	
PE	
RD ■	

	A	B	C
RR84 ◆	24"	1⅝"	84"
RR384 ◆	24"	3"	84"
RR96 ◆	24"	1⅝"	96"
RR396 ◆	24"	3"	96"
RR84 X 32DP ■	32"	1⅝"	84"
RR384 X 32DP ■	32"	3"	84"
RR96 X 32DP ■	32"	1⅝"	96"
RR396 X 32DP ■	32"	3"	96"

Refrigerator Return · ¾" Panel

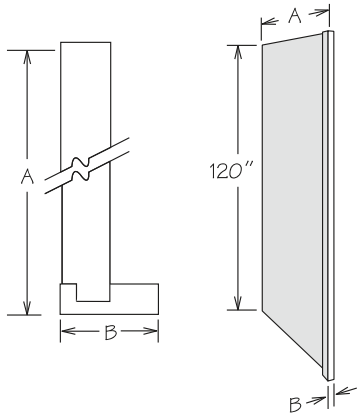

- Reversible for left or right installation
- Solid wood front
- 24" Deep Refrigerator Returns feature ¾" engineered wood finished on both sides to match cabinet box exterior
- 32" Deep Refrigerator Returns feature ¾" plywood finished on both sides to match cabinet box exterior
- Front filler can be trimmed to a minimum of 1" wide
- Field trimmable in height, can be notched for toe kick

PORTFOLIO SELECT & POTFOLIO	VALUE BUILT
APC ◆	RD ■
RD ■	

	A	B
RR120FL ◆	24"	1⅝"
RR3120FL ◆	24"	3"
RR120FL X 32DP ■	32"	1⅝"
RR3120FL X 32DP ■	32"	3"

Sink/Vanity Front Return

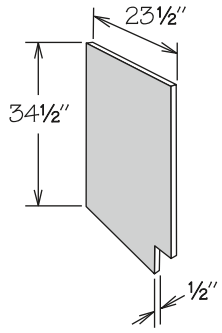

- All door styles feature ½" engineered wood with outside to match cabinet exterior and inside with a natural woodgrain look
- Specify left or right
- Wall attachment block included
- SFR (R/L) with the Furniture Ends Option (FE) will include a rabbeted front edge
- Field trimmable

PORTFOLIO SELECT & POTFOLIO
APC
FE
PE

SFRR
SFRL

Sink/Vanity Front Floor

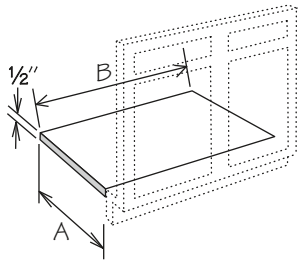

- All door styles feature ½" engineered wood with one side finished with a natural woodgrain look
- ½" oversize in width
- FL36X36 to be used for CSF36 (field trim to fit)
- FL48X48 to be used for CSF42 (field trim to fit)
- Field trimmable

FL24
FL36
FL36X36
FL48
FL48X48
FL60
FL72

Paneling

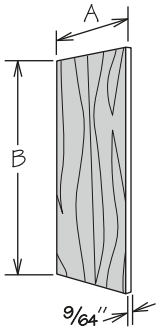

- Wood and Duraform Espresso door styles feature plywood, with vertical grain, finished on one side to match cabinet box exterior
- Duraform (excluding Duraform Espresso) Painted and Thermofoil door styles feature engineered wood finished on one side to match cabinet box exterior
- Field trimmable, can be notched for toe kick

WOOD	A	B
WEP30	11¼"	30⅛"
WEP42	11¼"	42⅛"
WEP48	11¼"	48"
WEP1542	14¼"	42⅛"
BEP34	23¼"	34½"
TEP84	23¼"	84"
TEP96	23¼"	96"
TEP120	23¼"	120"
FP4834	48"	34½"
FP4896	48"	96"
FP9634	96"	34½"
FP9648	96"	48"

Grooved Paneling

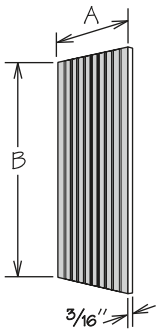

- Grooved every 1½" on one side
- All door styles feature ¾6" plywood finished on one side to match cabinet box exterior - glazed finishes will be glazed
- Field trimmable, can be notched for toe kick
- FP9634 Grooved Paneling is shipped as two 48" wide x 34½" high panels

	A	B
WEP30 GROOVED	11¼"	30⅛"
WEP42 GROOVED	11¼"	42⅛"
WEP48 GROOVED	11¼"	48"
WEP1542 GROOVED	14¼"	42⅛"
BEP34 GROOVED	23¼"	34½"
TEP84 GROOVED	23¼"	84"
TEP96 GROOVED	23¼"	96"
FP4834 GROOVED	48"	34½"
FP4896 GROOVED	48"	96"
FP9634 GROOVED	96"	34½"

Wood End Panel

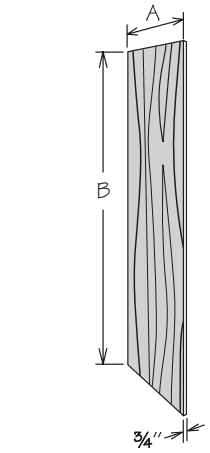

- Wood panels feature engineered wood finished on both sides to match cabinet box exterior for all door styles
  - » Edge banded on both long edges
- Field trimmable, can be notched for toe kick

WOOD	A	B
WBEP	24"	34½"
WTEP84	24"	84"
WTEP96	24"	96"
WTEP120	24"	120"
DWTEP84	32"	84"
DWTEP96	32"	96"

½" Panel

NEW! PRODUCT

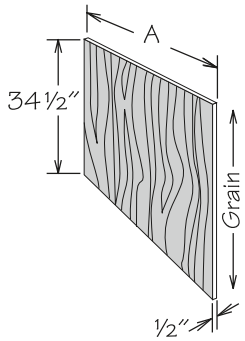

- Wood panels feature plywood finished on one side to match cabinet box exterior for all door styles
- Recommend Outside Corner Molding (OCM8) to cover raw edges
- WFP9634 is shipped as two 48" wide x 34½" high panels
- Field trimmable, can be notched for toe kick

WOOD	A
WFP4834	48"
WFP9634	96"

¾" Panel

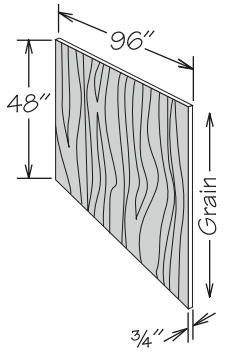

- Wood panels feature plywood finished on both sides to match cabinet box exterior for all door styles
- WP9648 is shipped as two 48" wide x 48" high panels
- Edge banded on all edges
- Field trimmable, can be notched for toe kick

WOOD
WP9648

Decorative Door Wainscoting Ordering Guide

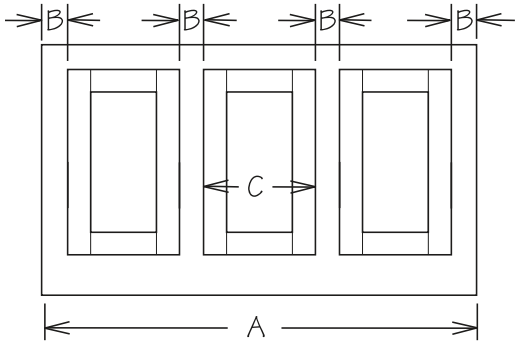

NOTES:
- ½" Panels (WFP_) are finished on one side to match cabinet box exterior - molding recommended to cover raw edges
- Dimension "B" is calculated based on even spacing on both ends and between panels - adjust as needed for outside corner molding.

Full Overlay Door Styles

A WIDTH	B SPACE BETWEEN DOORS	C DOOR WIDTH	PANEL	DOORS (NO DRILL)
30"	3/16"	14 23/32"	WFP4834	(2) DR15FH BUTT
36"	3/16"	17 23/32"	WFP4834	(2) DR18FH BUTT
42"	9/32"	20 9/16"	WFP4834	(2) DR21FH
48"	5/8"	15 5/32"	WFP4834	(3) DR16FH BUTT
60"	7/32"	14 23/32"	WFP9634	(4) DR15FH BUTT
72"	7/32"	17 23/32"	WFP9634	(4) DR18FH BUTT
84"	11/32"	20 9/16"	WFP9634	(4) DR21FH
96"	11/32"	23 9/16"	WFP9634	(4) DR24FH

Partial Overlay Door Styles

A WIDTH	B SPACE BETWEEN DOORS	C DOOR WIDTH	PANEL	DOORS (NO DRILL)
30"	11/16"	13 15/16"	WFP4834	(2) DR1530 BUTT
36"	11/16"	16 15/16"	WFP4834	(2) DR1830 BUTT
42"	1 13/32"	18 7/8"	WFP4834	(2) DR2130
48"	13/32"	15 7/16"	WFP4834	(3) DR1630 BUTT
60"	27/32"	13 15/16"	WFP9634	(4) DR1530 BUTT
72"	27/32"	16 15/16"	WFP9634	(4) DR1830 BUTT
84"	1 11/16"	18 7/8"	WFP9634	(4) DR2130
96"	1 11/16"	21 7/8"	WFP9634	(4) DR2430

Decorator Matching Doors · Wall Cabinets

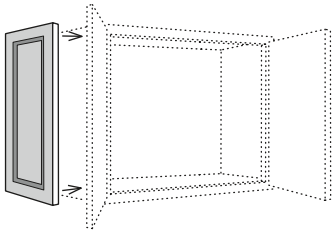

- Furniture Ends Option (FE) or WEP30/WEP42 panel is recommended for installation
- Attaches to side of wall cabinet
- Matches style and finish of cabinet doors
- Panel thickness is ¾"
- Refer to Timberlake Parts Directory for dimensions
- Not drilled for hinges

DMDW18
DMDW24
DMDW30
DMDW36
DMDW39
DMDW42

Decorator Matching Doors · Base Cabinets

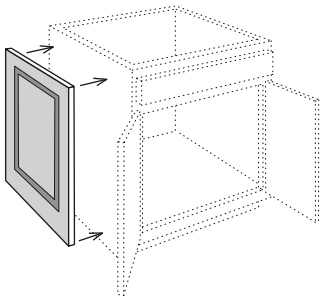

- Furniture Ends Option (FE) or BEP34 panel is recommended for installation
- Attaches to side of 24" deep base cabinet
- Matches style and finish of cabinet doors
- Panel thickness is ¾"
- Refer to Timberlake Parts Directory for dimensions
- Not drilled for hinges

DMDB

Decorator Matching Doors · Base End Angle Cabinets

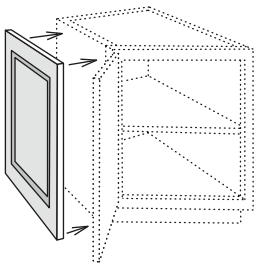

- Furniture Ends Option (FE) or WEP42 panel is recommended for installation
- Attaches to side of BEA12 or BS2434
- Matches style and finish of cabinet doors
- Panel thickness is ¾"
- Refer to Timberlake Parts Directory for dimensions
- Not drilled for hinges

DMDBEA12

Decorator Matching Doors · Desk Cabinets

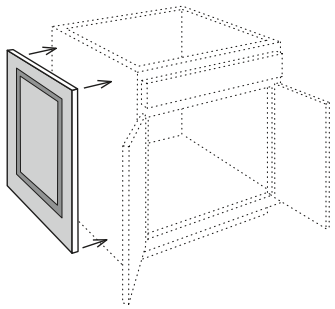

- Furniture Ends Option (FE) or BEP34 panel is recommended for installation
- Attaches to side of 21" or 24" deep desk cabinet
- Matches style and finish of cabinet doors
- Panel thickness is ¾"
- Refer to Timberlake Parts Directory for dimensions
- Not drilled for hinges

DMDD21
DMDD24

Decorator Matching Doors · Vanity Cabinet

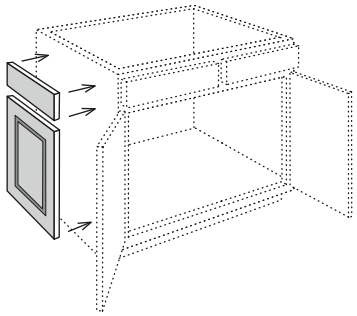

- Furniture Ends Option (FE) or BEP34 panel is recommended for installation
- Attaches to side of 20¾" deep x 31⅛" high vanity cabinet
  - » For 18" deep x 31⅛" high vanity cabinets order DR1821 ND and DDF18
  - » For 20¾" deep x 34½" high vanity cabinets order DR21FH ND (FOL) or DR2130 (SOL)
  - » For 18" deep x 34½" high vanity cabinets order DR18FH ND (FOL) or DR1830 (SOL)
- Matches style and finish of cabinet doors
- Panel thickness is ¾"
- Refer to Timberlake Parts Directory for dimensions
- Not drilled for hinges

DMDV

Decorator Matching Doors · Tall Cabinets

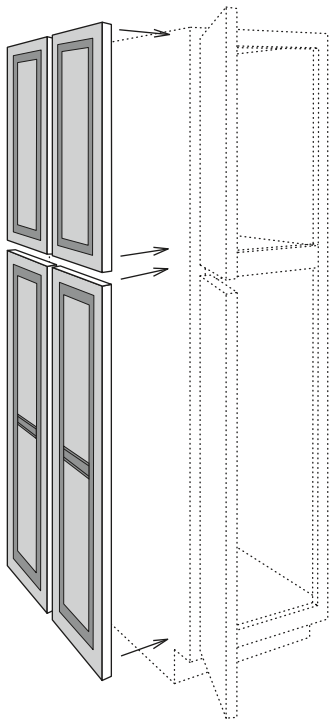

24" Deep Shown

- Cabinets indicated with an astersik (*) are available for Portfolio Select and Portfolio only
- Furniture Ends Option (FE) or TEP84/TEP96 panel is recommended for installation
- Attaches to side of utility or oven cabinet
- Matches style and finish of cabinet doors
- Panel thickness is ¾"
- 24" deep features four doors (as shown)
- 12" deep features two doors
- Bottom doors have a center rail for select door styles - refer to door style section
- Refer to Timberlake Parts Directory for dimensions
- Not drilled for hinges

12" DEEP

DMDT8412
DMDT9012
*DMDT9312
DMDT9612

**N/A for Value Built*

24" DEEP

DMDT8424
DMDT9024
*DMDT9324
DMDT9624

**N/A for Value Built*

Universal Filler

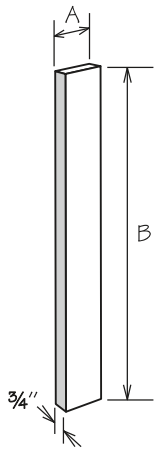

- Wood fillers:
  - » ¾" solid wood
  - » UF1__ and UF2__ are finished on front, one long, and both short edges to match cabinet box exterior
  - » UF3__ , UF6__, and S3S__ are finished on front and all four edges to match cabinet box exterior
  - » S4S__ are finished on front, back, and all four edges to match cabinet box exterior
- Field trimmable

WOOD	A	B
UF1	3"	30½"
UF2	6"	30½"
UF3	3"	30½"
UF6	6"	30½"
UF142	1"	42⅛"
UF242	2"	42⅛"
UF342	3"	42⅛"
UF642	6"	42⅛"
UF380	3"	80"
UF680	6"	80"
UF392	3"	92"
UF692	6"	92"
S3S396	3"	96"
S3S696	6"	96"
S4S396	3"	96"
S4S696	6"	96"
UF3120	3"	120"

Universal Filler Extension

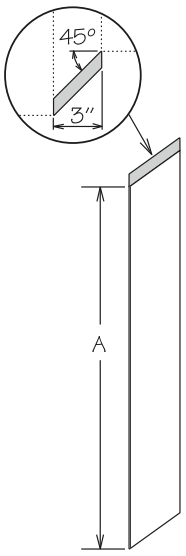

- ¾" solid wood
- Finished on front and all four edges to match cabinet box exterior
- Field trimmable

	A
UF E3	30½"
UF E342	42⅛"

Fluted Beaded Filler · Reversible

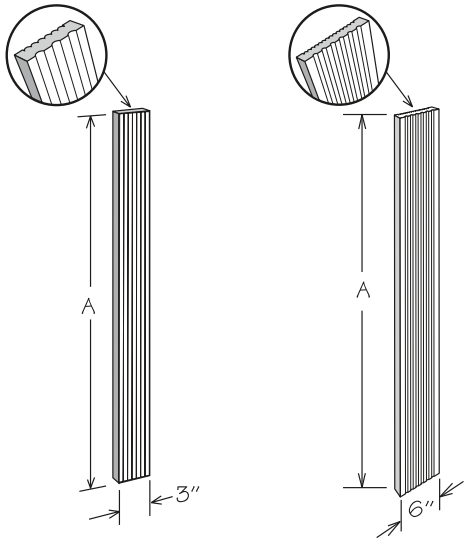

- Filler is fluted on one side and beaded on reverse side
- Finished on all sides to match cabinet box exterior - glazed finishes will be glazed
- ¾" solid wood
- Apply decorative blocks for accent
- Field trimmable
- Ensure correct side is exposed when installed

3" WIDE	A
FBF3	30½"
FBF342	42⅛"
FBF384	84"
FBF396	96"

6" WIDE	
FBF6	30½"
FBF642	42⅛"
FBF684	84"
FBF696	96"

Fluted Beaded Filler Extension · Reversible

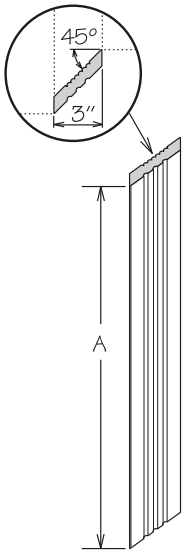

- For wall or base application
- Filler is fluted on one side and beaded on reverse side
- Finished all sides to match cabinet box exterior - glazed finishes will be glazed
- ¾" solid wood
- Apply 3" wide decorative blocks for accent
- Field trimmable
- Ensure correct side is exposed when installed

	A
FBF E3	30½"
FBF E342	42⅛"

Base Corner Filler

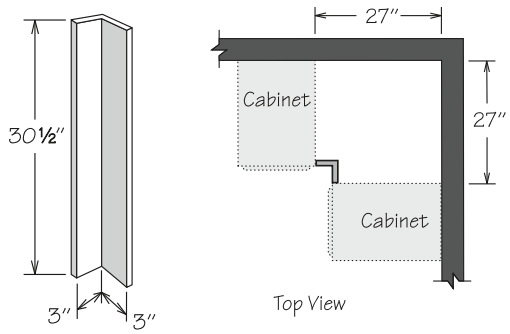

- ¾" solid wood
- Finished on front and all four edges to match cabinet box exterior
- Field trimmable

BCF27

3" Overlay Filler

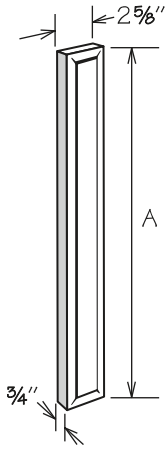

- For use with full overlay door styles only
- Outside profile is a complementary match to the outside profile of door - see next page for details
- Wood overlay fillers feature:
  - » Solid wood finished to match cabinet box exterior for Wood and painted door styles - glazed finishes will be glazed, excluding slab overlay profiles
  - » Duraform wrapped MDF for Duraform Espresso, Harbor, Linen and Stone door styles
- Finished on all edges
- Indicate door style when ordering
- Not field trimmable
- Must be mounted to a Universal Filler (order separately)

WOOD	A
WOF312	11 9/16"
WOF315	14 9/16"
WOF318	17 9/16"
WOF321	20"
WOF324	23 7/8"
WOF327	26 1/2"
WOF330	29 1/2"
WOF336	35 1/2"
WOF339	38 1/2"
WOF342	41 1/2"
BOF3	29 7/8"
DOF3	23 7/8"
VOF3	26 1/2"
TOF384	79 3/8"
TOF390	85 3/8"
TOF393	88 3/8"
TOF396	91 3/8"

6" Overlay Filler

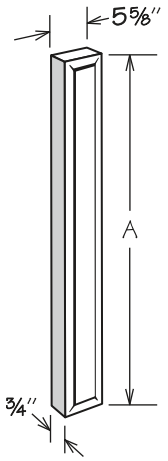

- WOF6_ are available for full overlay Duraform door styles only
- BOF6_ available for full overlay door styles only
- Outside profile is a complementary match to the outside profile of door - see next page for details
- Duraform overlay fillers feature wrapped engineered wood for Duraform Espresso, Harbor, Linen and Stone door styles
- Wood overlay fillers feature solid wood finished to match cabinet box exterior for Wood and Painted door styles - glazed finishes will be glazed, excluding slab overlay profiles
- Finished on all edges
- Indicate door style when ordering
- Not field trimmable
- Must be mounted to a Universal Filler (order separately)

DURAFORM	WOOD	A
BOF6	BOF6	29 7/8"
WOF630	—	29 1/2"
WOF636	—	35 1/2"
WOF639	—	38 1/2"
WOF642	—	41 1/2"

Overlay Filler Profiles

PROFILE FOR:
- Charleston
- Sierra Vista

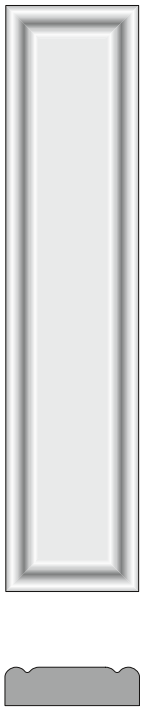

PROFILE FOR:
- Kinsdale

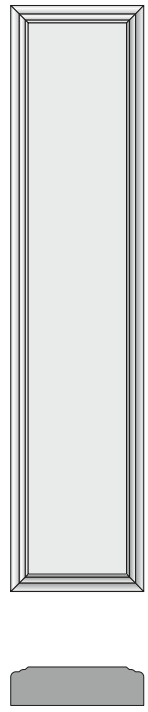

PROFILE FOR:
- Windsor

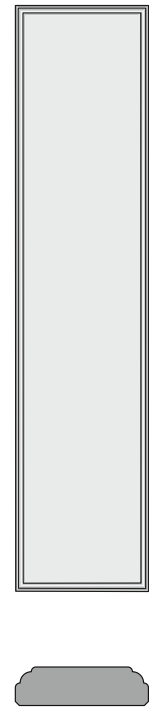

PROFILE FOR:
- Beckley (Maple & Painted)
- Corban
- Lausanne
- Maddox
- New Haven
- Sonoma

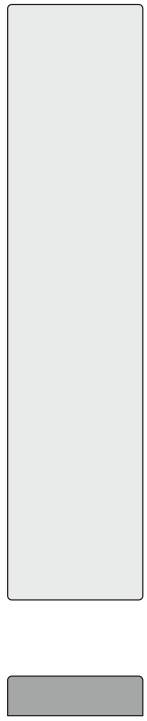

PROFILE FOR:
- Beckley (Thermofoil)
- Canton

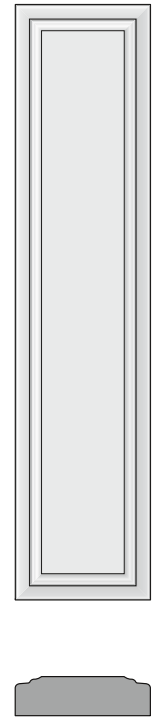

Plain Box Filler

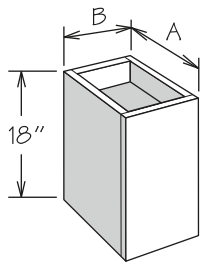

- Veneered engineered wood finished to match cabinet box exterior
- Features ¼" reveal
- Trimmable in height to 14⅛" tall
- Reversible for left or right installation
- Finished to match cabinet box exterior

	A	B
WPB91815	15"	9"
WPB121815	15"	12"
WPB91824	24"	9"
WPB121824	24"	12"

Column Filler

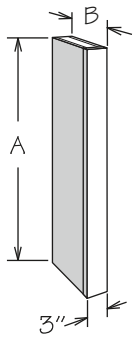

- Veneered engineered wood finished to match cabinet box exterior
- 3" wide x ¾" thick solid wood front
- Sides are flush with face
- Reversible for left or right installation
- Top and bottom edges of returns are edge banded
- Apply overlay filler or 3" wide decorative blocks for accent
- Field trimmable to any depth
- Field trimmable in height noted below:
  - » WPC31530 field trimmable to 27⅛", 24½", 20⅝" 18⅛", 15⅛", or 12⅛"
  - » WPC31542 field trimmable to 39⅛" or 36⅛"
  - » WPC31560 field trimmable to 54" or 48"
  - » BPC32734 field trimmable to 31⅛" or 28½"
  - » TPC32796 field trimmable to 93" or 90"
  - » TPC32784 not trimmable in height

	A	B
Wall		
WPC31530	30⅛"	15"
WPC31542	42⅛"	15"
WPC31560	60"	15"
Base		
BPC32734	34½"	27"
Tall		
TPC32784	84"	27"
TPC32796	96"	27"

Base Toe Kick

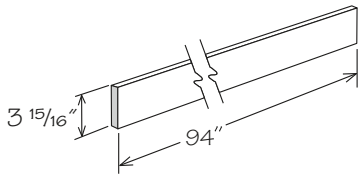

- Print toe kicks used for all door styles and feature 9/64" engineered wood finished on one side to match cabinets box exterior
- Touch Up Kit recommended for exposed ends
- Field trimmable

PRINT
BTK8 PRT

Shelf Rests


Metal

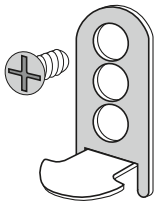
MFD


Clip Lock

- Metal and MFD shelf rests are nickel plated steel
- MFD shelf rests are six position adjustable for alignment of shelf with mullion
- Clip Lock shelf rests are molded clear high-strength polycarbonate

	QTY.
Bookshelves & Wall Shelves	
SHELF REST METAL 4PK	4
SHELF REST METAL 12	12
Mullion Frame Cabinet Shelves	
SHELF REST MFD PK	8
½" Base Shelves	
CLIP LOCK SHELF 4 PK	4
¾" Base & Tall Shelves	
CLIP LOCK SHELF 3/4 4 PK	4

Cleat

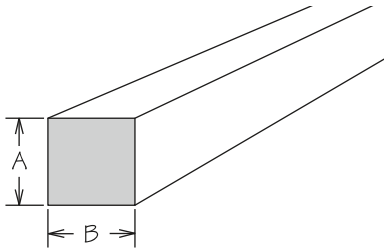

- HWC 3/4X3/4X94 is shipped in two 47" long pieces
- HWC 1/2X1/2X94 is shipped in three 30 1/2" long pieces
- Unfinished

	A	B	LENGTH
HWC 1/2X1/2X94	½"	½"	91½"
HWC 3/4X3/4X94	¾"	¾"	94"
HWC 1X2X94	¾"	1½"	94"
HWC 2X4X96	1½"	3½"	96"

Screws Cover Caps

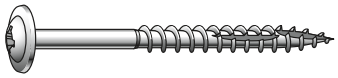

- Installation screws are Phillips panhead 2½" long
- Cover caps are used to conceal predrilled holes in cabinet backs

	QTY.
SCREW INST 2.5 BX100	100
COVER CAP 10MM TAN 4	4

Hinge Restriction Clip

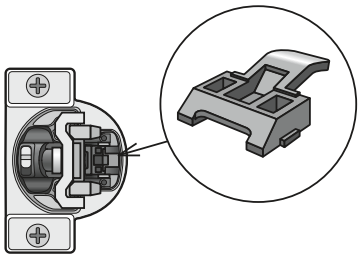

- Limits door opening to 86° to avoid contact with adjacent objects
- For use on CushionClose hinges only
- Package includes 10 per bag (1 required per hinge)
- Cannot be used on cabinets with roll out accessories

HINGE CC ANG RES CLP
HINGE CC RES CLP SAL

Dummy Drawer Front Fastener

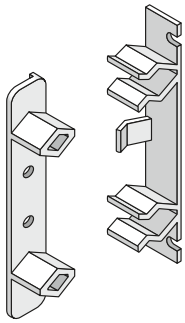

- For installation of one dummy drawer front
- Kit contents:
  - » Two sets of DDF Fasteners
  - » Eight screws
  - » One instruction sheet
- Please refer to cabinet specifications as some cabinets will require more than one kit

DDF FASTENER

Touch Up Kit

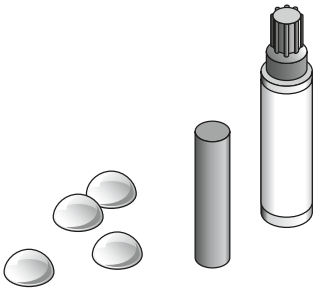

- Kit for repairing minor dents, gouges, scratches, and surface imperfections includes:
  - » Putty Stick
  - » Touch Up Marker
  - » Door bumpers
- Instructions printed on bag

TOUCHUP KIT

Spray Stain

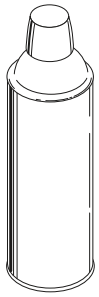

- SPRAY STAIN TINTED available for all finishes
- SPRAY STAIN CLEAR strongly recommended for use as top coat for all finishes
- Indicate species and finish when ordering
- 11 ounce aerosol spray can

SPRAY STAIN CLEAR
SPRAY STAIN TINTED

Stain

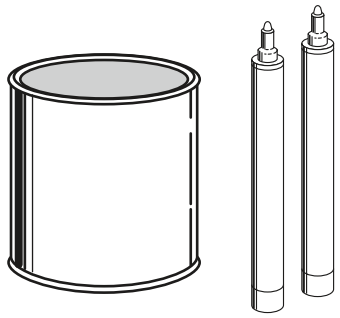

- STAIN PINT (QUART) used for all non-glazed stains and non-glazed painted finishes
- STAIN GLAZED PINT (QUART) used for all glazed stains and glazed painted finishes
- STAIN TOP COAT strongly recommended for application over ALL finishes (order separately)
- STAIN GLAZED includes STAIN PINT and two STAIN GLAZED PENS per pint
- STAIN GLAZED PENS available for order separately (quantity of two)
- Indicate species and finish when ordering
- PINT covers approximately 40 square feet
- QUART covers approximately 80 square feet
- Instructions included

STAIN PINT
STAIN QUART
STAIN GLAZED PINT
STAIN GLAZED QUART
STAIN GLAZED PENS
STAIN TOP COAT PINT
STAIN TOP COAT QUART

Putty Stick & Marker

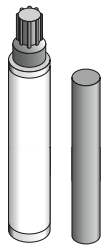

- Indicate species and finish when ordering
- TU MARKER EXTERIOR for use on all stains and Premium finishes
- TU MARKER EXT GLAZE for use on all Glazed Premium finishes - includes markers for both glazed and non-glazed surfaces
- Putty Sticks are recommended for filling minor dents, gouges and scratches made during or after installation
- Touch-Up Markers add color to minor surface scratches

PUTTY STICK

PUTTY STICK EXTERIOR
PUTTY STICK INTERIOR

TOUCH-UP MARKER

TU MARKER EXTERIOR
TU MARKER EXT GLAZE
TU MARKER DURAFORM
TU MARKER INTERIOR

Table Skirting Furniture Bracket

NEW! PRODUCT

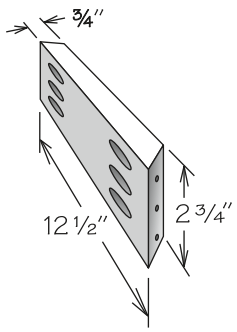

- Bracket used to attach table apron at corners
- Made of solid wood
- Accommodates 3" and 4½" decorative legs
- Ships with screws

TSFB

DECORATIVE HARDWARE

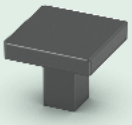
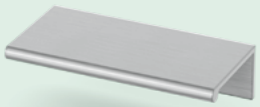


DRILLING RESTRICTIONS AND NOTES

- Timberlake Cabinetry does not recommend drilling through any door/drawer joint for installation of decorative hardware.
- Door and drawer fronts must be adjusted before installing decorative hardware.
- Madera door styles cannot be drilled more than 1 ½" from all edges of doors.

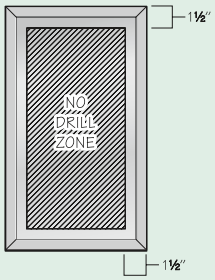

RESTRICTION KEY

NR12	Not recommended on regular 12" drawers
NR15	Not recommended on regular drawers 15" or 12"
NR18	Not recommended on regular drawers 18", 15" or 12"
NR12LG	Not recommended on large 12" drawers
NR15LG	Not recommended on large 15" or 12" drawers
NR18LG	Not recommended on large 18", 15" or 12" drawers
NR21LG	Not recommended on large 21", 18", 15" or 12" drawers
NRKDC	Not recommended kneehole drawers
NR	Not recommended for any size drawer

Timberlake does not recommend drilling through any door/drawer joint for installation of decorative hardware. Door and drawer fronts must be adjusted before installing decorative hardware. Some decorative hardware has restrictions for use on certain door styles which will be indicated with restriction-specific icons followed by the door style(s) that have the restriction. Restrictions may differ on regular and large drawer fronts based on center panel dimensions for each door style.

HARDWARE RESTRICTION EXAMPLE

NR12	Corban w/ DFO, Downing, New Haven w/ DFO, Sonoma w/ DFO, Windsor w/ DFO
NR12LG	Charleston, Downing, New Haven w/ DFO, Windsor w/ DFO
NR15LG	Sierra Vista

EXPLANATION: This specific hardware is not recommended on:

- 12" regular drawer fronts for the Corban w/ DFO, Downing, New Haven w/ DFO, Sonoma w/ DFO and Windsor w/ DFO door styles
- 12" large drawer fronts for the Charleston, Downing, New Haven w/ DFO and Windsor w/ DFO door styles
- 15" or 12" large drawer fronts for the Sierra Vista door style

Antic



Antic Pull
Polished Chrome
PULL 6797PC
128mm Center
Overall Length: 5 13/16"



Antic Pull
Satin Nickel
PULL 6797SN
128mm Center
Overall Length: 5 13/16"



Antic Pull
Vintage Nickel
PULL 6797VN
128mm Center
Overall Length: 5 13/16"



Antic Pull
Modern Brushed Gold
PULL 6797MG
128mm Center
Overall Length: 5 13/16"



Antic Pull
Matte Black
PULL 6797MB
128mm Center
Overall Length: 5 13/16"

NR	Madera
NR12	New Haven w/ DFO, Windsor w/ DFO
NR12LG	Charleston, Downing, Maddox w/ DFO, New Haven w/ DFO, Sierra Vista, Windsor w/ DFO



Antic Knob
Polished Chrome
KNOB 6798PC



Antic Knob
Satin Nickel
KNOB 6798SN



Antic Knob
Vintage Nickel
KNOB 6798VN



Antic Knob
Modern Brushed Gold
KNOB 6798MG



Antic Knob
Matte Black
KNOB 6798MB

Briolette



Briolette Pull
Polished Chrome
PULL 2272PC
128mm Center
Overall Length: 5 3/4"



Briolette Pull
Satin Nickel
PULL 2272SN
128mm Center
Overall Length: 5 3/4"



Briolette Pull
Modern Brushed Gold
PULL 2272MG
128mm Center
Overall Length: 5 3/4"



Briolette Pull
Brushed Copper
PULL 2272CP
128mm Center
Overall Length: 5 3/4"



Briolette Pull
Matte Black
PULL 2272MB
128mm Center
Overall Length: 5 3/4"

NR12	New Haven w/ DFO, Windsor w/ DFO
NR12LG	Charleston, Downing, Maddox w/ DFO, New Haven w/ DFO, Sierra Vista, Windsor w/ DFO



Briolette Knob
Polished Chrome
KNOB 2271PC



Briolette Knob
Satin Nickel
KNOB 2271SN



Briolette Knob
Modern Brushed Gold
KNOB 2271MG



Briolette Knob
Brushed Copper
KNOB 2271CP



Briolette Knob
Matte Black
KNOB 2271MB

Radiant



Radiant Pull
Satin Nickel
PULL 0318SN
128mm Center
Overall Length: 5 ¾"



Radiant Pull
Weathered Nickel
PULL 0318WN
128mm Center
Overall Length: 5 ¾"



Radiant Pull
Modern Brushed Gold
PULL 0318MG
128mm Center
Overall Length: 5 ¾"



Radiant Pull
Verona Bronze
PULL 0318VB
128mm Center
Overall Length: 5 ¾"



Radiant Pull
Matte Black
PULL 0318MB
128mm Center
Overall Length: 5 ¾"

NR12 New Haven w/ DFO, Windsor w/ DFO

NR12LG Charleston, Downing, Maddox w/ DFO, New Haven w/ DFO, Sierra Vista, Windsor w/ DFO



Radiant Knob
Satin Nickel
KNOB 0319SN



Radiant Knob
Weathered Nickel
KNOB 0319WN



Radiant Knob
Modern Brushed Gold
KNOB 0319MG



Radiant Knob
Verona Bronze
KNOB 0319VB



Radiant Knob
Matte Black
KNOB 0319MB

Trillion



Trillion Pull
Polished Chrome
PULL 0875PC
128mm Center
Overall Length: 5 ½"



Trillion Pull
Satin Nickel
PULL 0875SN
128mm Center
Overall Length: 5 ½"



Trillion Pull
Vintage Nickel
PULL 0875VN
128mm Center
Overall Length: 5 ½"



Trillion Pull
Modern Brushed Gold
PULL 0875MG
128mm Center
Overall Length: 5 ½"



Trillion Pull
Matte Black
PULL 0875MB
128mm Center
Overall Length: 5 ½"

NR12 New Haven w/ DFO

NR12LG Downing, New Haven w/ DFO



Trillion Knob
Polished Chrome
KNOB 0876PC



Trillion Knob
Satin Nickel
KNOB 0876SN



Trillion Knob
Vintage Nickel
KNOB 0876VN



Trillion Knob
Modern Brushed Gold
KNOB 0876MG



Trillion Knob
Matte Black
KNOB 0876MB

Marquise



Marquise Pull - 6 7/8"
Polished Chrome
PULL 4213PC
160mm Center
Overall Length: 6 7/8"



Marquise Pull - 6 7/8"
Satin Nickel
PULL 4213SN
160mm Center
Overall Length: 6 7/8"



Marquise Pull - 6 7/8"
Modern Brushed Gold
PULL 4213MG
160mm Center
Overall Length: 6 7/8"



Marquise Pull - 6 7/8"
Brushed Copper
PULL 4213CP
160mm Center
Overall Length: 6 7/8"



Marquise Pull - 6 7/8"
Matte Black
PULL 4213MB
160mm Center
Overall Length: 6 7/8"

NR12	Corban w/ DFO, Downing, New Haven w/ DFO, Sierra Vista, Sonoma w/ DFO, Windsor w/ DFO
NR12LG	Charleston, Corban w/ DFO, Downing, Maddox w/ DFO, New Haven w/ DFO, Sonoma w/ DFO, Windsor w/ DFO
NR15LG	Sierra Vista



Marquise Pull - 5 9/16"
Polished Chrome
PULL 4212PC
128mm Center
Overall Length: 5 9/16"



Marquise Pull - 5 9/16"
Satin Nickel
PULL 4212SN
128mm Center
Overall Length: 5 9/16"



Marquise Pull - 5 9/16"
Modern Brushed Gold
PULL 4212MG
128mm Center
Overall Length: 5 9/16"



Marquise Pull - 5 9/16"
Brushed Copper
PULL 4212CP
128mm Center
Overall Length: 5 9/16"



Marquise Pull - 5 9/16"
Matte Black
PULL 4212MB
128mm Center
Overall Length: 5 9/16"

NR12	New Haven w/ DFO, Windsor w/ DFO
NR12LG	Charleston, Downing, Maddox w/ DFO, New Haven w/ DFO, Sierra Vista, Windsor w/ DFO

Halo



Halo Knob
Polished Chrome
KNOB 3106PC



Halo Knob
Satin Nickel
KNOB 3106SN



Halo Knob
Modern Brushed Gold
KNOB 3106MG



Halo Knob
Brushed Copper
KNOB 3106CP



Halo Knob
Matte Black
KNOB 3106MB

Rectangular

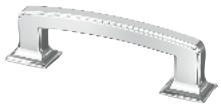

Rectangular Pull
Polished Chrome
PULL 3502PC
96mm Center
Overall Length: 4 13/16"



Rectangular Pull
Satin Nickel
PULL 3502SN
96mm Center
Overall Length: 4 13/16"



Rectangular Pull
Vintage Nickel
PULL 3502VN
96mm Center
Overall Length: 4 13/16"



Rectangular Pull
Modern Brushed Gold
PULL 3502MG
96mm Center
Overall Length: 4 13/16"

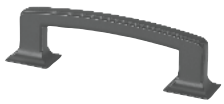

Rectangular Pull
Matte Black
PULL 3502MB
96mm Center
Overall Length: 4 13/16"

NR12LG Sierra Vista, Windsor w/ DFO

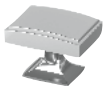

Rectangular Knob
Polished Chrome
KNOB 3503PC

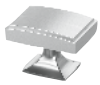

Rectangular Knob
Satin Nickel
KNOB 3503SN



Rectangular Knob
Vintage Nickel
KNOB 3503VN



Rectangular Knob
Modern Brushed Gold
KNOB 3503MG



Rectangular Knob
Matte Black
KNOB 3503MB

Beaded



Beaded Pull
Satin Nickel
PULL 3562SN
96mm Center
Overall Length: 4 1/2"



Beaded Pull
Weathered Nickel
PULL 3562WN
96mm Center
Overall Length: 4 1/2"



Beaded Pull
Modern Brushed Gold
PULL 3562MG
96mm Center
Overall Length: 4 1/2"



Beaded Pull
Verona Bronze
PULL 3562VB
96mm Center
Overall Length: 4 1/2"



Beaded Pull
Matte Black
PULL 3562MB
96mm Center
Overall Length: 4 1/2"

NR12LG Sierra Vista

Stamped



Stamped Knob
Satin Nickel
KNOB 3563SN



Stamped Knob
Weathered Nickel
KNOB 3563WN



Stamped Knob
Modern Brushed Gold
KNOB 3563MG



Stamped Knob
Verona Bronze
KNOB 3563VB



Stamped Knob
Matte Black
KNOB 3563MB

Bow



Bow Pull - 7 13/16"
Polished Chrome
PULL 3129PC
5" Center
Overall Length: 7 13/16"

Bow Pull - 7 13/16"
Satin Nickel
PULL 3129SN
5" Center
Overall Length: 7 13/16"

Bow Pull - 7 13/16"
Modern Brushed Gold
PULL 3129MG
5" Center
Overall Length: 7 13/16"

Bow Pull - 7 13/16"
Brushed Copper
PULL 3129CP
5" Center
Overall Length: 7 13/16"

Bow Pull - 7 13/16"
Matte Black
PULL 3129MB
5" Center
Overall Length: 7 13/16"

NR12	Charleston, Corban w/ DFO, Downing, Maddox w/ DFO, New Haven w/ DFO, Sierra Vista, Sonoma w/ DFO, Windsor w/ DFO
NR12LG	Charleston, Corban w/ DFO, Downing, Maddox w/ DFO, New Haven w/ DFO, Sonoma w/ DFO, Windsor w/ DFO
NR15LG	Sierra Vista



Bow Pull - 6 3/16"
Polished Chrome
PULL 3128PC
96mm Center
Overall Length: 6 3/16"

Bow Pull - 6 3/16"
Satin Nickel
PULL 3128SN
96mm Center
Overall Length: 6 3/16"

Bow Pull - 6 3/16"
Modern Brushed Gold
PULL 3128MG
96mm Center
Overall Length: 6 3/16"

Bow Pull - 6 3/16"
Brushed Copper
PULL 3128CP
96mm Center
Overall Length: 6 3/16"

Bow Pull - 6 3/16"
Matte Black
PULL 3128MB
96mm Center
Overall Length: 6 3/16"

NR12	New Haven w/ DFO, Windsor w/ DFO
NR12LG	Charleston, Downing, Maddox w/ DFO, New Haven w/ DFO, Windsor w/ DFO
NR15LG	Sierra Vista

Tempo



Tempo Pull
Polished Chrome
PULL 0323PC
128mm Center
Overall Length: 5 7/16"

Tempo Pull
Satin Nickel
PULL 0323SN
128mm Center
Overall Length: 5 7/16"

Tempo Pull
Modern Brushed Gold
PULL 0323MG
128mm Center
Overall Length: 5 7/16"

Tempo Pull
Brushed Copper
PULL 0323CP
128mm Center
Overall Length: 5 7/16"

Tempo Pull
Matte Black
PULL 0323MB
128mm Center
Overall Length: 5 7/16"

NR12	New Haven w/ DFO
NR12LG	Downing, New Haven w/ DFO, Sierra Vista

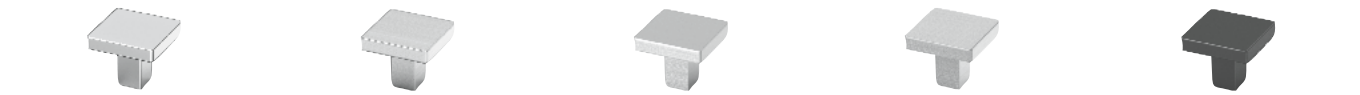

Tempo Knob
Polished Chrome
KNOB 0322PC

Tempo Knob
Satin Nickel
KNOB 0322SN

Tempo Knob
Modern Brushed Gold
KNOB 0322MG

Tempo Knob
Brushed Copper
KNOB 0322CP

Tempo Knob
Matte Black
KNOB 0322MB

Cup



Cup Pull
Satin Nickel
PULL 3105SN
3" Center
Overall Length: 4 5/8"



Cup Pull
Weathered Nickel
PULL 3105WN
3" Center
Overall Length: 4 5/8"



Cup Pull
Modern Brushed Gold
PULL 3105MG
3" Center
Overall Length: 4 5/8"



Cup Pull
Verona Bronze
PULL 3105VB
3" Center
Overall Length: 4 5/8"



Cup Pull
Matte Black
PULL 3105MB
3" Center
Overall Length: 4 5/8"

NR Madera, Sierra Vista, Windsor w/ DFO

NRKDC Corban w/ DFO, New Haven w/ DFO, Sonoma w/ DFO

Classic



Classic Pull
Satin Nickel
PULL 3172SN
3" Center
Overall Length: 5 5/16"



Classic Pull
Verona Bronze
PULL 3172VB
3" Center
Overall Length: 5 5/16"



Classic Pull
Matte Black
PULL 3172MB
3" Center
Overall Length: 5 5/16"

NR12LG Sierra Vista



Classic Knob
Polished Chrome
KNOB 3173PC



Classic Knob
Satin Nickel
KNOB 3173SN



Classic Knob
Weathered Nickel
KNOB 3173WN



Classic Knob
Modern Brushed Gold
KNOB 3173MG



Classic Knob
Verona Bronze
KNOB 3173VB



Classic Knob
Matte Black
KNOB 3173MB

Toggle



Toggle Knob
Satin Nickel
KNOB 3239SN



Toggle Knob
Verona Bronze
KNOB 3239VB



Toggle Knob
Matte Black
KNOB 3239MB

Twisted Crescent



Twisted Crescent Pull
Satin Nickel
PULL 3122SN
96mm Center • Overall Length: 5 1/16"



Twisted Crescent Pull
Verona Bronze
PULL 3122VB
96mm Center • Overall Length: 5 1/16"



Twisted Crescent Pull
Matte Black
PULL 3122MB
96mm Center • Overall Length: 5 1/16"

Button



Button Knob
Satin Nickel
KNOB 3213SN



Button Knob
Verona Bronze
KNOB 3213VB



Button Knob
Matte Black
KNOB 3213MB

Ringed



Ringed Arch Pull
Satin Nickel
PULL 3672SN
3" Center • Overall Length: 5 1/2"



Ringed Arch Pull
Verona Bronze
PULL 3672VB
3" Center • Overall Length: 5 1/2"



Ringed Arch Pull
Matte Black
PULL 3672MB
3" Center • Overall Length: 5 1/2"

NR12LG Downing, Sierra Vista



Ringed Knob
Satin Nickel
KNOB 3673SN



Ringed Knob
Verona Bronze
KNOB 3673VB



Ringed Knob
Matte Black
KNOB 3673MB

T-Bar



T-Bar Pull - 12 7/16"
Polished Chrome
PULL 4730PC
256mm Center
Overall Length: 12 7/16"

T-Bar Pull - 12 7/16"
Satin Nickel
PULL 4730SN
256mm Center
Overall Length: 12 7/16"

T-Bar Pull - 12 7/16"
Modern Brushed Gold
PULL 4730MG
256mm Center
Overall Length: 12 7/16"

T-Bar Pull - 12 7/16"
Brushed Copper
PULL 4730CP
256mm Center
Overall Length: 12 7/16"

T-Bar Pull - 12 7/16"
Matte Black
PULL 4730MB
256mm Center
Overall Length: 12 7/16"

NR12	Any door style
NR15	Corban w/ DFO, Downing, Kinsdale, Maddox w/ DFO, New Haven w/ DFO, Sierra Vista, Sonoma w/ DFO, Windsor w/ DFO
NR12LG	Any door style
NR15LG	Charleston, Corban w/ DFO, Kinsdale, Maddox w/ DFO, New Haven w/ DFO, Sonoma w/ DFO, Windsor w/ DFO
NR18LG	Downing
NR21LG	Sierra Vista



T-Bar Pull - 8 5/8"
Polished Chrome
PULL 4712PC
160mm Center
Overall Length: 8 5/8"

T-Bar Pull - 8 5/8"
Satin Nickel
PULL 4712SN
160mm Center
Overall Length: 8 5/8"

T-Bar Pull - 8 5/8"
Modern Brushed Gold
PULL 4712MG
160mm Center
Overall Length: 8 5/8"

T-Bar Pull - 8 5/8"
Brushed Copper
PULL 4712CP
160mm Center
Overall Length: 8 5/8"

T-Bar Pull - 8 5/8"
Matte Black
PULL 4712MB
160mm Center
Overall Length: 8 5/8"

NR12	Corban w/ DFO, Downing, Kinsdale, Maddox w/ DFO, Sierra Vista, Sonoma w/ DFO, Windsor w/ DFO
NR15	New Haven w/ DFO
NR12LG	Charleston, Corban w/ DFO, Kinsdale, Maddox w/ DFO, Sonoma w/ DFO, Windsor w/ DFO
NR15LG	Downing, New Haven w/ DFO, Sierra Vista



T-Bar Pull - 5 5/16"
Polished Chrome
PULL 4701PC
3" Center
Overall Length: 5 5/16"

T-Bar Pull - 5 5/16"
Satin Nickel
PULL 4701SN
3" Center
Overall Length: 5 5/16"

T-Bar Pull - 5 5/16"
Modern Brushed Gold
PULL 4701MG
3" Center
Overall Length: 5 5/16"

T-Bar Pull - 5 5/16"
Brushed Copper
PULL 4701CP
3" Center
Overall Length: 5 5/16"

T-Bar Pull - 5 5/16"
Matte Black
PULL 4701MB
3" Center
Overall Length: 5 5/16"

NR12LG	Sierra Vista



T-Bar Knob
Polished Chrome
KNOB 4703PC

T-Bar Knob
Satin Nickel
KNOB 4703SN

T-Bar Knob
Modern Brushed Gold
KNOB 4703MG

T-Bar Knob
Brushed Copper
KNOB 4703CP

T-Bar Knob
Matte Black
KNOB 4703MB

Tab

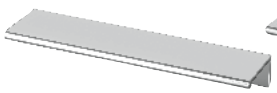

Tab Pull - 6"
Polished Chrome
PULL 1060PC
Overall Length: 6"

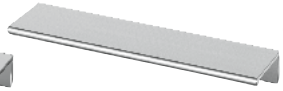

Tab Pull - 6"
Satin Nickel
PULL 1060SN
Overall Length: 6"

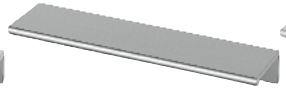

Tab Pull - 6"
Modern Brushed Gold
PULL 1060MG
Overall Length: 6"

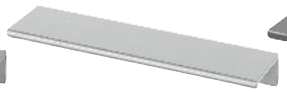

Tab Pull - 6"
Brushed Copper
PULL 1060CP
Overall Length: 6"

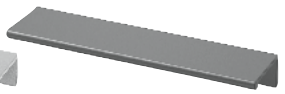

Tab Pull - 6"
Matte Black
PULL 1060MB
Overall Length: 6"



Tab Pull - 3"
Polished Chrome
PULL 1055PC
Overall Length: 3"



Tab Pull - 3"
Satin Nickel
PULL 1055SN
Overall Length: 3"



Tab Pull - 3"
Modern Brushed Gold
PULL 1055MG
Overall Length: 3"



Tab Pull - 3"
Brushed Copper
PULL 1055CP
Overall Length: 3"

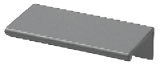

Tab Pull - 3"
Matte Black
PULL 1055MB
Overall Length: 3"



Tab Pull - 1¾"
Polished Chrome
PULL 1050PC
Overall Length: 1¾"

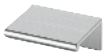

Tab Pull - 1¾"
Satin Nickel
PULL 1050SN
Overall Length: 1¾"



Tab Pull - 1¾"
Modern Brushed Gold
PULL 1050MG
Overall Length: 1¾"

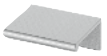

Tab Pull - 1¾"
Brushed Copper
PULL 1050CP
Overall Length: 1¾"

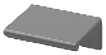

Tab Pull - 1¾"
Matte Black
PULL 1050MB
Overall Length: 1¾"

Coat Hooks

NEW! FINISHES



Brushed Gold
HOOK BG
3⅛" Deep • 4" High



Satin Nickel
HOOK SN
3⅛" Deep • 4" High



Verona Bronze
HOOK VB
3⅛" Deep • 4" High



Matte Black
HOOK MB
3⅛" Deep • 4" High

PARTS DIRECTORY

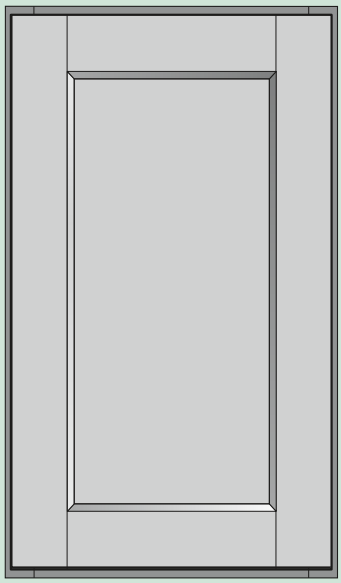

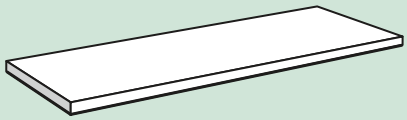

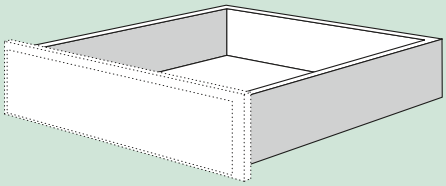

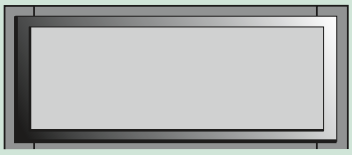

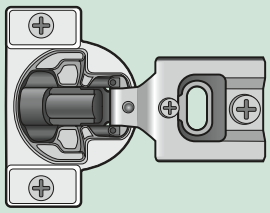

Legend

DOOR NOMENCLATURE LEGEND		
Description:		Examples:
DR_	Door - must be ordered as hinged left, right or no drill	SKU: DR1230 Option: Left Hinge
DR_ SD	Specialty Door - must be ordered as Mullion Frame or Open Frame and as hinged left, right, or no drill	SKU: DR1230 SD Option: OFD - Open Frame Door Option: Left Hinge
DR_FH	Full-Height Door - used for Full-Height Base, Full-Height Peninsula Base and Full-Height Vanity Base cabinets and must be ordered as hinged left, right, or no drill	SKU: DR15 FH Option: Left Hinge
DR__ V	Standard Height Vanity Door - must be ordered as hinged left, right, or no drill	SKU: DR1821V Option: Right Hinge

DRAWER/PANEL FRONT NOMENCLATURE		
Description:		Examples:
DDF__	Drawer Front - used for Base, Desk, Oven or Vanity standard cabinet drawer	DDF12
DDF__D	Large Drawer Front - used for Standard Overlay Base, Desk, Oven or Vanity large cabinet drawer	DDF12D
DDF__M	Large Drawer Front - used for Full Overlay Base, Desk, Oven or Vanity large cabinet drawer	DDF12M
DDF__VD	Vanity Large Drawer Front - used for Full Overlay Vanity large cabinet drawer	DDF12VD
DDFOV__	Drawer Front for Full Overlay Oven cabinet	DDFOV33
DDFKDC__	Kneehole Drawer Front - used for Kneehole cabinet drawer	DDFKDC27/21

DRAWER BODY NOMENCLATURE		
Description:		Examples:
DRB__ DT FD	Standard Portfolio Select or upgraded Portfolio Dovetail Drawer Box - for use with full-extension hidden glides	DRB12 X 21DP DT FD
DRB__ DT SG	Dovetail Drawer Box - for use with side-mounted drawer glides	DRB12 X 18DP DT SG
DRB__ SG	Engineered Wood Drawer Box - for use with side-mounted drawer glides	DRB12 X 18DP SG
DRB__M DT FD	Large standard Portfolio Select or upgraded Portfolio Dovetail Drawer Box - for use with full-extension hidden glides	DRB12M X 21DP DT FD
DRB__M DT SG	Large Dovetail Drawer Box - for use with side-mounted drawer glides	DRB12M X 18DP DT SG
DRB__M SG	Large Engineered Wood Drawer Box - for use with side-mounted drawer glides	DRB12M X 18DP SG

ADJUSTABLE SHELVING NOMENCLATURE		
Description:		Examples:
__" SHELF ¾	¾" Adjustable Shelf - used for standard construction Wall, Desk, Base cabinets with standard interior	12" SHELF ¾
__" SHELF ADJ	½" Adjustable Shelf - used for Value Built Wall, Desk or Base cabinets with standard interior	30" SHELF ADJ
__" SHELF MI	For standard construction Matching Interior ¾" Adjustable Shelf	12" SHELF MI
__" SHELF PLY	For All Plywood Construction ¾" Adjustable Shelf NOTE: All Base Cabinet shelves with the All Plywood Construction Option will default to 24" deep	12" SHELF PLY 12" SHELF 24DP PLY
__" SHELF MI PLY	For All Plywood Construction ¾" Matching Interior Adjustable Shelf	12" SHELF MI PLY
S __	¾" Adjustable Shelf - used for standard construction Utility, Oven or Vanity Linen cabinets with standard interior	S3024
	¾" Adjustable Shelf - used for Utility, Oven and Vanity Linen cabinets NOTE: For Matching Interior and/or All Plywood Construction, shelf needs to be upgraded using the MI and/or APC construction options	SKU: S3024 Option: MI - Matching Interior AND/OR Option: APC - All Plywood Construction
Adjustable Shelving Notes: Microwave Wall Cabinet replacement shelves feature Matching Interior standard		

Contents

WALL CABINETS

Standard Wall 200
Peninsula Wall 201
Wall With Spice Rack, Blind Wall 202
Blind Peninsula Wall, Wall End Angle, Wall Top Hinge 203
Corner Wall, Peninsula Corner Wall, Refrigerator Wall 204
Appliance Garage 205
Microwave Wall, Compact Microwave Wall, Wall Range Hood, Wall Easy Reach 206

BASE CABINETS

Standard Base, Base With Sliding Shelves 208
Base With Base Pot & Pan Organizer Cabinet, Peninsula Base, Blind Corner, Base With Drawer Accessory 210
Base With Roll Out Tray Divider, Base With Wastebasket(s), Blind Peninsula Corner 214
Full-Height Base, Full-Height Base With Accessory, Full-Height Base With Sliding Shelves 216
Full-Height Base with Base Mixer Lift, Full-Height Blind Base, Full-Height Blind Base with Pull Out 216
Full-Height Blind Base with Swing Out, Full-Height Base With Wastebasket(s) 217
Base End Angle, Full-Height Peninsula Base 217
Furniture Drawers, Pedestal Drawers 218
Two Drawer Bases 219
Three Drawer Bases, Three Drawer Base with Drawer Accessory 220
Four Drawer Bases, Four Drawer Base with Drawer Accessory, Built-In Base Microwave Cabinet 221
Base Microwave Cabinet, Base Spice Drawer Cabinet, Spice Drawer Cabinet 221
Corner Sink Base, Corner Sink Front, Deep Sink Base, Sink/Range Base and Front 222
Sink Base With Factory Installed Tilt-Out Tray(s) 222
Corner Bases, Base Plumbing Skirt, Adaptable Sink Base Kit 223

TALL CABINETS

Utility With Adjustable Shelves 224
Utility With Sliding Shelves 226
Single Oven Cabinets 228
Double Oven Cabinets 236
Oven Microwave Cabinet 236

VANITY CABINETS

31 1/8" Vanity Base, 31 1/8" Vanity Sink Base With Top Drawers, 18" Deep x 31 1/8" Vanity Combo Sink Base 238
31 1/8" Vanity Combo Sink Base, 34 1/2" Vanity Base 239
Vanity Base With Factory Installed Wastebasket(s), 34 1/2" Vanity Sink Base With Top Drawers 239
18" Deep x 34 1/2" High Vanity Combo Sink Base, 34 1/2" Vanity Combo Sink Base 240
Vanity Linen, Medicine Cabinet, Valet Cabinet, Full-Height Vanity Base 241
31 1/8" Vanity Sink Base, Vanity Sink Front, Vanity Plumbing Skirt 242
Vanity Drawer Base 243

DESK CABINETS

Desk Door 244
Kneehole Drawer Cabinet, Desk With Wastebasket(s), Desk Drawer Base, File Drawer Base 246

DIMENSIONS

Doors 248
Decorator Doors 249
Shelves, Sliding Shelves, Base Pot & Pan Organizer, Roll Out Tray Divider 250
Drawer Fronts 251
Drawer Boxes 252
Glass Inserts 254

MISCELLANEOUS PARTS & ACCESSORIES 256
REPLACEMENT DRAWER REFERENCE SHEET 259

SKU	Qty	DOOR Part Name	SPECIALTY DOOR Part Name	GLASS INSERT Part Name	Qty	ADJUSTABLE SHELF *For All Plywood Construction and/or Matching Interior Adjustable Shelf, refer to Parts Directory legend PORTFOLIO SELECT & PORTFOLIO *Part Name	 VALUE BUILT *Part Name
STANDARD WALL ▪ 42" HIGH							
W942	1	DR942	N/A	N/A	3	9" SHELF 3/4	9" SHELF
W1242	1	DR1242	DR1242 SD	DGI-1242	3	12" SHELF 3/4	12" SHELF
W1542	1	DR1542	DR1542 SD	DGI-1542	3	15" SHELF 3/4	15" SHELF
W1842	1	DR1842	DR1842 SD	DGI-1842	3	18" SHELF 3/4	18" SHELF
W2142	1	DR2142	DR2142 SD	DGI-2142	3	21" SHELF 3/4	21" SHELF
W2442 BUTT	2	DR1242 BUTT	DR1242 BUTT SD	DGI-1242 BUTT	3	24" SHELF 3/4	24" SHELF
W2742 BUTT	2	DR1342 BUTT	DR1342 BUTT SD	DGI-1342 BUTT	3	27" SHELF 3/4	27" SHELF ADJ
W3042 BUTT	2	DR1542 BUTT	DR1542 BUTT SD	DGI-1542 BUTT	3	30" SHELF 3/4	30" SHELF ADJ
W3342 BUTT	2	DR1642 BUTT	DR1642 BUTT SD	DGI-1642 BUTT	3	33" SHELF 3/4	33" SHELF ADJ
W3642 BUTT	2	DR1842 BUTT	DR1842 BUTT SD	DGI-1842 BUTT	3	36" SHELF 3/4	36" SHELF ADJ
W3942	2	DR1942	DR1942 SD	DGI-1942	3	39" SHELF 3/4	39" SHELF ADJ
W4242	2	DR2142	DR2142 SD	DGI-2142	3	42" SHELF 3/4	42" SHELF ADJ
STANDARD WALL ▪ 39" HIGH							
W939	1	DR939	N/A	N/A	3	9" SHELF 3/4	N/A
W1239	1	DR1239	DR1239 SD	DGI-1239	3	12" SHELF 3/4	N/A
W1539	1	DR1539	DR1539 SD	DGI-1539	3	15" SHELF 3/4	N/A
W1839	1	DR1839	DR1839 SD	DGI-1839	3	18" SHELF 3/4	N/A
W2139	1	DR2139	DR2139 SD	DGI-2139	3	21" SHELF 3/4	N/A
W2439 BUTT	2	DR1239 BUTT	DR1239 BUTT SD	DGI-1239 BUTT	3	24" SHELF 3/4	N/A
W2739 BUTT	2	DR1339 BUTT	DR1339 BUTT SD	DGI-1339 BUTT	3	27" SHELF 3/4	N/A
W3039 BUTT	2	DR1539 BUTT	DR1539 BUTT SD	DGI-1539 BUTT	3	30" SHELF 3/4	N/A
W3339 BUTT	2	DR1639 BUTT	DR1639 BUTT SD	DGI-1639 BUTT	3	33" SHELF 3/4	N/A
W3639 BUTT	2	DR1839 BUTT	DR1839 BUTT SD	DGI-1839 BUTT	3	36" SHELF 3/4	N/A
STANDARD WALL ▪ 36" HIGH							
W936	1	DR936	N/A	N/A	2	9" SHELF 3/4	9" SHELF
W1236	1	DR1236	DR1236 SD	DGI-1236	2	12" SHELF 3/4	12" SHELF
W1536	1	DR1536	DR1536 SD	DGI-1536	2	15" SHELF 3/4	15" SHELF
W1836	1	DR1836	DR1836 SD	DGI-1836	2	18" SHELF 3/4	18" SHELF
W2136	1	DR2136	DR2136 SD	DGI-2136	2	21" SHELF 3/4	21" SHELF
W2436 BUTT	2	DR1236 BUTT	DR1236 BUTT SD	DGI-1236 BUTT	2	24" SHELF 3/4	24" SHELF
W2736 BUTT	2	DR1336 BUTT	DR1336 BUTT SD	DGI-1336 BUTT	2	27" SHELF 3/4	27" SHELF ADJ
W3036 BUTT	2	DR1536 BUTT	DR1536 BUTT SD	DGI-1536 BUTT	2	30" SHELF 3/4	30" SHELF ADJ
W3336 BUTT	2	DR1636 BUTT	DR1636 BUTT SD	DGI-1636 BUTT	2	33" SHELF 3/4	33" SHELF ADJ
W3636 BUTT	2	DR1836 BUTT	DR1836 BUTT SD	DGI-1836 BUTT	2	36" SHELF 3/4	36" SHELF ADJ
W3936	2	DR1936	DR1936 SD	DGI-1936	2	39" SHELF 3/4	39" SHELF ADJ
W4236	2	DR2136	DR2136 SD	DGI-2136	2	42" SHELF 3/4	42" SHELF ADJ
STANDARD WALL ▪ 30" HIGH							
W930	1	DR930	N/A	N/A	2	9" SHELF 3/4	9" SHELF
W1230	1	DR1230	DR1230 SD	DGI-1230	2	12" SHELF 3/4	12" SHELF
W1530	1	DR1530	DR1530 SD	DGI-1530	2	15" SHELF 3/4	15" SHELF
W1830	1	DR1830	DR1830 SD	DGI-1830	2	18" SHELF 3/4	18" SHELF
W2130	1	DR2130	DR2130 SD	DGI-2130	2	21" SHELF 3/4	21" SHELF
W2430	1	DR2430	N/A	N/A	2	24" SHELF 3/4	24" SHELF
W2430 BUTT	2	DR1230 BUTT	DR1230 BUTT SD	DGI-1230 BUTT	2	24" SHELF 3/4	24" SHELF
W2730 BUTT	2	DR1330 BUTT	DR1330 BUTT SD	DGI-1330 BUTT	2	27" SHELF 3/4	27" SHELF ADJ
W3030 BUTT	2	DR1530 BUTT	DR1530 BUTT SD	DGI-1530 BUTT	2	30" SHELF 3/4	30" SHELF ADJ
W3330 BUTT	2	DR1630 BUTT	DR1630 BUTT SD	DGI-1630 BUTT	2	33" SHELF 3/4	33" SHELF ADJ
W3630 BUTT	2	DR1830 BUTT	DR1830 BUTT SD	DGI-1830 BUTT	2	36" SHELF 3/4	36" SHELF ADJ
W3930	2	DR1930	DR1930 SD	DGI-1930	2	39" SHELF 3/4	39" SHELF ADJ
W4230	2	DR2130	DR2130 SD	DGI-2130	2	42" SHELF 3/4	42" SHELF ADJ
W4530	3	DR1530	DR1530 SD	DGI-1530	2	45" SHELF 3/4	45" SHELF ADJ
W4830	2	DR2430	N/A	N/A	2	48" SHELF 3/4	48" SHELF ADJ

SKU	Qty	DOOR Part Name	SPECIALTY DOOR Part Name	GLASS INSERT Part Name	Qty	ADJUSTABLE SHELF *For All Plywood Construction and/or Matching Interior Adjustable Shelf, refer to Parts Directory legend PORTFOLIO SELECT & PORTFOLIO *Part Name	VALUE BUILT *Part Name
STANDARD WALL • 27" HIGH							
W3027 BUTT	2	DR1527 BUTT	DR1527 BUTT SD	DGI-1527 BUTT	1	30" SHELF 3/4	30" SHELF ADJ
STANDARD WALL • 24" HIGH							
W1224	1	DR1224	DR1224 SD	DGI-1224	1	12" SHELF 3/4	12" SHELF
W1524	1	DR1524	DR1524 SD	DGI-1524	1	15" SHELF 3/4	15" SHELF
W1824	1	DR1824	DR1824 SD	DGI-1824	1	18" SHELF 3/4	18" SHELF
W2124	1	DR2124	DR2124 SD	DGI-2124	1	21" SHELF 3/4	21" SHELF
W2424 BUTT	2	DR1224 BUTT	DR1224 BUTT SD	DGI-1224 BUTT	1	24" SHELF 3/4	24" SHELF
W2724 BUTT	2	DR1324 BUTT	DR1324 BUTT SD	DGI-1324 BUTT	1	27" SHELF 3/4	27" SHELF ADJ
W3024 BUTT	2	DR1524 BUTT	DR1524 BUTT SD	DGI-1524 BUTT	1	30" SHELF 3/4	30" SHELF ADJ
W3324 BUTT	2	DR1624 BUTT	DR1624 BUTT SD	DGI-1624 BUTT	1	33" SHELF 3/4	33" SHELF ADJ
W3624 BUTT	2	DR1824 BUTT	DR1824 BUTT SD	DGI-1824 BUTT	1	36" SHELF 3/4	36" SHELF ADJ
W3924	2	DR1924	DR1924 SD	DGI-1924	1	39" SHELF 3/4	39" SHELF ADJ
W4224	2	DR2124	DR2124 SD	DGI-2124	1	42" SHELF 3/4	42" SHELF ADJ
W4524	3	DR1524	DR1524 SD	DGI-1524	1	45" SHELF 3/4	45" SHELF ADJ
STANDARD WALL • 21" HIGH							
W3021 BUTT	2	DR1521 BUTT	DR1521 BUTT SD	DGI-1521 BUTT	-	N/A	N/A
W3321 BUTT	2	DR1621 BUTT	DR1621 BUTT SD	DGI-1621 BUTT	-	N/A	N/A
W3621 BUTT	2	DR1821 BUTT	DR1821 BUTT SD	DGI-1821 BUTT	-	N/A	N/A
W3921	2	DR1921	DR1921 SD	DGI-1921	-	N/A	N/A
STANDARD WALL • 18" HIGH							
W1218	1	DR1218	DR1218 SD	DGI-1218	-	N/A	N/A
W1518	1	DR1518	DR1518 SD	DGI-1518	-	N/A	N/A
W1818	1	DR1818	DR1818 SD	DGI-1818	-	N/A	N/A
W2118	1	DR2118	DR2118 SD	DGI-2118	-	N/A	N/A
W2418 BUTT	2	DR1218 BUTT	DR1218 BUTT SD	DGI-1218 BUTT	-	N/A	N/A
W2718 BUTT	2	DR1318 BUTT	DR1318 BUTT SD	DGI-1318 BUTT	-	N/A	N/A
W3018 BUTT	2	DR1518 BUTT	DR1518 BUTT SD	DGI-1518 BUTT	-	N/A	N/A
W3318 BUTT	2	DR1618 BUTT	DR1618 BUTT SD	DGI-1618 BUTT	-	N/A	N/A
W3618 BUTT	2	DR1818 BUTT	DR1818 BUTT SD	DGI-1818 BUTT	-	N/A	N/A
W3918	2	DR1918	DR1918 SD	DGI-1918	-	N/A	N/A
W4218	2	DR2118	DR2118 SD	DGI-2118	-	N/A	N/A
STANDARD WALL • 15" HIGH							
W1215	1	DR1215	DR1215 SD	DGI-1215	-	N/A	N/A
W1515	1	DR1515	DR1515 SD	DGI-1515	-	N/A	N/A
W1815	1	DR1815	DR1815 SD	DGI-1815	-	N/A	N/A
W2115	1	DR2115	DR2115 SD	DGI-2115	-	N/A	N/A
W2415 BUTT	2	DR1215 BUTT	DR1215 BUTT SD	DGI-1215 BUTT	-	N/A	N/A
W2715 BUTT	2	DR1315 BUTT	DR1315 BUTT SD	DGI-1315 BUTT	-	N/A	N/A
W3015 BUTT	2	DR1515 BUTT	DR1515 BUTT SD	DGI-1515 BUTT	-	N/A	N/A
W3315 BUTT	2	DR1615 BUTT	DR1615 BUTT SD	DGI-1615 BUTT	-	N/A	N/A
W3615 BUTT	2	DR1815 BUTT	DR1815 BUTT SD	DGI-1815 BUTT	-	N/A	N/A
W3915	2	DR1915	DR1915 SD	DGI-1915	-	N/A	N/A
STANDARD WALL • 12" HIGH							
W1212	1	DR1212	DR1212 SD	DGI-1212	-	N/A	N/A
W1512	1	DR1512	DR1512 SD	DGI-1512	-	N/A	N/A
W1812	1	DR1812	DR1812 SD	DGI-1812	-	N/A	N/A
W2112	1	DR2112	DR2112 SD	DGI-2112	-	N/A	N/A
W2412 BUTT	2	DR1212 BUTT	DR1212 BUTT SD	DGI-1212 BUTT	-	N/A	N/A
W2712 BUTT	2	DR1312 BUTT	DR1312 BUTT SD	DGI-1312 BUTT	-	N/A	N/A
W3012 BUTT	2	DR1512 BUTT	DR1512 BUTT SD	DGI-1512 BUTT	-	N/A	N/A
W3312 BUTT	2	DR1612 BUTT	DR1612 BUTT SD	DGI-1612 BUTT	-	N/A	N/A
W3612 BUTT	2	DR1812 BUTT	DR1812 BUTT SD	DGI-1812 BUTT	-	N/A	N/A
W3912	2	DR1912	DR1912 SD	DGI-1912	-	N/A	N/A

SKU	Qty	DOOR Part Name	SPECIALTY DOOR Part Name	GLASS INSERT Part Name	Qty	ADJUSTABLE SHELF *For All Plywood Construction and/or Matching Interior Adjustable Shelf, refer to Parts Directory legend PORTFOLIO SELECT & PORTFOLIO *Part Name	 VALUE BUILT *Part Name
WITH SPICE RACK • 42" HIGH							
W1542 SR	1	DR1542	N/A	N/A	3	15" SHELF 3/4	15" SHELF
W1842 SR	1	DR1842	N/A	N/A	3	18" SHELF 3/4	18" SHELF
W2142 SR	1	DR2142	N/A	N/A	3	21" SHELF 3/4	21" SHELF
WITH SPICE RACK • 39" HIGH							
W1539 SR	1	DR1539	N/A	N/A	3	15" SHELF 3/4	N/A
W1839 SR	1	DR1839	N/A	N/A	3	18" SHELF 3/4	N/A
W2139 SR	1	DR2139	N/A	N/A	3	21" SHELF 3/4	N/A
WITH SPICE RACK • 36" HIGH							
W1536 SR	1	DR1536	N/A	N/A	2	15" SHELF 3/4	15" SHELF
W1836 SR	1	DR1836	N/A	N/A	2	18" SHELF 3/4	18" SHELF
W2136 SR	1	DR2136	N/A	N/A	2	21" SHELF 3/4	21" SHELF
WITH SPICE RACK • 30" HIGH							
W1530 SR	1	DR1530	N/A	N/A	2	15" SHELF 3/4	15" SHELF
W1830 SR	1	DR1830	N/A	N/A	2	18" SHELF 3/4	18" SHELF
W2130 SR	1	DR2130	N/A	N/A	2	21" SHELF 3/4	21" SHELF
BLIND WALL • 42" HIGH							
BLW24/2742	1	DR1242	DR1242 SD	DGI-1242	3	24" SHELF 3/4	24" SHELF
BLW30/3342	1	DR1842	DR1842 SD	DGI-1842	3	30" SHELF 3/4	30" SHELF ADJ
BLW33/3642	1	DR2142	DR2142 SD	DGI-2142	3	33" SHELF 3/4	33" SHELF ADJ
BLW36/3942 BUTT	2	DR1242 BUTT	DR1242 BUTT SD	DGI-1242 BUTT	3	36" SHELF 3/4	36" SHELF ADJ
BLW39/4242 BUTT	2	DR1342 BUTT	DR1342 BUTT SD	DGI-1342 BUTT	3	39" SHELF 3/4	39" SHELF ADJ
BLW42/4542 BUTT	2	DR1542 BUTT	DR1542 BUTT SD	DGI-1542 BUTT	3	42" SHELF 3/4	42" SHELF ADJ

SKU	Qty	DOOR Part Name	SPECIALTY DOOR Part Name	GLASS INSERT Part Name	Qty	ADJUSTABLE SHELF *For All Plywood Construction and/or Matching Interior Adjustable Shelf, refer to Parts Directory legend PORTFOLIO SELECT & PORTFOLIO *Part Name	 VALUE BUILT *Part Name
BLIND WALL ▪ 39" HIGH							
BLW24/2739	1	DR1239	DR1239 SD	DGI-1239	3	24" SHELF 3/4	N/A
BLW30/3339	1	DR1839	DR1839 SD	DGI-1839	3	30" SHELF 3/4	N/A
BLW33/3639	1	DR2139	DR2139 SD	DGI-2139	3	33" SHELF 3/4	N/A
BLW36/3939 BUTT	2	DR1239 BUTT	DR1239 BUTT SD	DGI-1239 BUTT	3	36" SHELF 3/4	N/A
BLW39/4239 BUTT	2	DR1339 BUTT	DR1339 BUTT SD	DGI-1339 BUTT	3	39" SHELF 3/4	N/A
BLW42/4539 BUTT	2	DR1539 BUTT	DR1539 BUTT SD	DGI-1539 BUTT	3	42" SHELF 3/4	N/A
BLIND WALL ▪ 36" HIGH							
BLW24/2736	1	DR1236	DR1236 SD	DGI-1236	2	24" SHELF 3/4	24" SHELF
BLW30/3336	1	DR1836	DR1836 SD	DGI-1836	2	30" SHELF 3/4	30" SHELF ADJ
BLW33/3636	1	DR2136	DR2136 SD	DGI-2136	2	33" SHELF 3/4	33" SHELF ADJ
BLW36/3936 BUTT	2	DR1236 BUTT	DR1236 BUTT SD	DGI-1236 BUTT	2	36" SHELF 3/4	36" SHELF ADJ
BLW39/4236 BUTT	2	DR1336 BUTT	DR1336 BUTT SD	DGI-1336 BUTT	2	39" SHELF 3/4	39" SHELF ADJ
BLW42/4536 BUTT	2	DR1536 BUTT	DR1530 BUTT SD	DGI-1530 BUTT	2	42" SHELF 3/4	42" SHELF ADJ
BLIND WALL ▪ 30" HIGH							
BLW24/2730	1	DR1230	DR1230 SD	DGI-1230	2	24" SHELF 3/4	24" SHELF
BLW27/3030	1	DR1530	DR1530 SD	DGI-1530	2	27" SHELF 3/4	27" SHELF ADJ
BLW30/3330	1	DR1830	DR1830 SD	DGI-1830	2	30" SHELF 3/4	30" SHELF ADJ
BLW33/3630	1	DR2130	DR2130 SD	DGI-2130	2	33" SHELF 3/4	33" SHELF ADJ
BLW36/3930	1	DR2430	N/A	N/A	2	36" SHELF 3/4	36" SHELF ADJ
BLW36/3930 BUTT	2	DR1230 BUTT	DR1230 BUTT SD	DGI-1230 BUTT	2	36" SHELF 3/4	36" SHELF ADJ
BLW39/4230 BUTT	2	DR1330 BUTT	DR1330 BUTT SD	DGI-1330 BUTT	2	39" SHELF 3/4	39" SHELF ADJ
BLW42/4530 BUTT	2	DR1530 BUTT	DR1530 BUTT SD	DGI-1530 BUTT	2	42" SHELF 3/4	42" SHELF ADJ
BLW45/4830 BUTT	2	DR1630 BUTT	DR1630 BUTT SD	DGI-1630 BUTT	2	45" SHELF 3/4	45" SHELF ADJ
BLW48/5130 BUTT	2	DR1830 BUTT	DR1830 BUTT SD	DGI-1830 BUTT	2	48" SHELF 3/4	48" SHELF ADJ
BLIND WALL ▪ 24" HIGH							
BLW24/2724	1	DR1224	DR1224 SD	DGI-1224	1	24" SHELF 3/4	24" SHELF
BLW27/3024	1	DR1524	DR1524 SD	DGI-1524	1	27" SHELF 3/4	27" SHELF ADJ
BLW30/3324	1	DR1824	DR1824 SD	DGI-1824	1	30" SHELF 3/4	30" SHELF ADJ
BLW33/3624	1	DR2124	DR2124 SD	DGI-2124	1	33" SHELF 3/4	33" SHELF ADJ
BLW36/3924 BUTT	2	DR1224 BUTT	DR1224 BUTT SD	DGI-1224 BUTT	1	36" SHELF 3/4	36" SHELF ADJ
WALL END ANGLE							
WEA1242	1	DR1542	DR1542 SD	DGI-1542	3	WEA SHELF 3/4	WEA SHELF
WEA1239	1	DR1539	DR1539 SD	DGI-1539	3	WEA SHELF 3/4	N/A
WEA1236	1	DR1536	DR1536 SD	DGI-1536	2	WEA SHELF 3/4	WEA SHELF
WEA1230	1	DR1530	DR1530 SD	DGI-1530	2	WEA SHELF 3/4	WEA SHELF
WALL TOP HINGE ▪ 12" HIGH							
WTH4212	1	DR4212 WTH	DR4212 WTH SD	DGI-1242	-	N/A	N/A
WALL TOP HINGE ▪ 15" HIGH							
WTH3015	1	DR3015 WTH	DR3015 WTH SD	DGI-1530	-	N/A	N/A
WTH3615	1	DR3615 WTH	DR3615 WTH SD	DGI-1536	-	N/A	N/A

SKU	Qty	DOOR Part Name	SPECIALTY DOOR Part Name	GLASS INSERT Part Name	Qty	ADJUSTABLE SHELF *For All Plywood Construction and/or Matching Interior Adjustable Shelf, refer to Parts Directory legend PORTFOLIO SELECT & PORTFOLIO *Part Name	VALUE BUILT *Part Name
WALL TOP HINGE • 18" HIGH							
WTH3018	1	DR3018 WTH	DR3018 WTH SD	DGI-1830	-	N/A	N/A
WTH3618	1	DR3618 WTH	DR3618 WTH SD	DGI-1836	-	N/A	N/A
WALL TOP HINGE • 15" HIGH X 24" DEEP							
WTH3015 X 24DP	1	DR3015 WTH	DR3015 WTH SD	DGI-1530	-	N/A	N/A
WTH3615 X 24DP	1	DR3615 WTH	DR3615 WTH SD	DGI-1536	-	N/A	N/A
WALL TOP HINGE • 18" HIGH X 24" DEEP							
WTH3018 X 24DP	1	DR3018 WTH	DR3018 WTH SD	DGI-1830	-	N/A	N/A
WTH3618 X 24DP	1	DR3618 WTH	DR3618 WTH SD	DGI-1836	-	N/A	N/A
CORNER WALL • 42" HIGH							
CW2442	1	DR1542	DR1542 SD	DGI-1542	3	CW SHELF ADJ 3/4	CW SHELF ADJ
CW2742	1	DR1542	DR1542 SD	DGI-1542	3	CW27 SHELF ADJ 3/4	CW27 SHELF ADJ
CWS2442 WD	1	DR1542	DR1542 SD	DGI-1542	3	CWS24 SHELF WD NP	CWS24 SHELF WD NP
CORNER WALL • 39" HIGH							
CW2439	1	DR1539	DR1539 SD	DGI-1539	3	CW SHELF ADJ 3/4	N/A
CW2739	1	DR1539	DR1539 SD	DGI-1539	3	CW27 SHELF ADJ 3/4	N/A
CWS2439 WD	1	DR1539	DR1539 SD	DGI-1539	3	CWS24 SHELF WD NP	N/A
CORNER WALL • 36" HIGH							
CW2436	1	DR1536	DR1536 SD	DGI-1536	2	CW SHELF ADJ 3/4	CW SHELF ADJ
CW2736	1	DR1536	DR1536 SD	DGI-1536	2	CW27 SHELF ADJ 3/4	CW27 SHELF ADJ
CWS2436 WD	1	DR1536	DR1536 SD	DGI-1536	2	CWS24 SHELF WD NP	CWS24 SHELF WD NP
CORNER WALL • 30" HIGH							
CW2430	1	DR1530	DR1530 SD	DGI-1530	2	CW SHELF ADJ 3/4	CW SHELF ADJ
CW2730	1	DR1530	DR1530 SD	DGI-1530	2	CW27 SHELF ADJ 3/4	CW27 SHELF ADJ
CWS2430	1	DR1530	DR1530 SD	DGI-1530	1	CWS UNIT RAS	CWS UNIT RAS
CWS2430 WD	1	DR1530	DR1530 SD	DGI-1530	2	CWS24 SHELF WD NP	CWS24 SHELF WD NP
CORNER WALL • 24" HIGH							
CW2424	1	DR1524	DR1524 SD	DGI-1524	-	N/A	N/A
CW2724	1	DR1524	DR1524 SD	DGI-1524	-	N/A	N/A
CORNER WALL • 18" HIGH							
CW2418	1	DR1518	DR1518 SD	DGI-1518	-	N/A	N/A
CW2718	1	DR1518	DR1518 SD	DGI-1518	-	N/A	N/A
CORNER WALL • 15" HIGH							
CW2415	1	DR1515	DR1515 SD	DGI-1515	-	N/A	N/A
CW2715	1	DR1515	DR1515 SD	DGI-1515	-	N/A	N/A
CORNER WALL • 12" HIGH							
CW2412	1	DR1512	DR1512 SD	DGI-1512	-	N/A	N/A
CW2712	1	DR1512	DR1512 SD	DGI-1512	-	N/A	N/A
REFRIGERATOR WALL • 27" HIGH X 24" DEEP							
W3027 X 24 DP BUTT	2	DR1527 BUTT	DR1527 BUTT SD	DGI-1527 BUTT	1	30" SHELF 3/4	30" SHELF ADJ
REFRIGERATOR WALL • 24" HIGH X 24" DEEP							
W3024 X 24 DP BUTT	2	DR1524 BUTT	DR1524 BUTT SD	DGI-1524 BUTT	1	30" SHELF 3/4	30" SHELF ADJ
W3324 X 24 DP BUTT	2	DR1624 BUTT	DR1624 BUTT SD	DGI-1624 BUTT	1	33" SHELF 3/4	33" SHELF ADJ
W3624 X 24 DP BUTT	2	DR1824 BUTT	DR1824 BUTT SD	DGI-1824 BUTT	1	36" SHELF 3/4	36" SHELF ADJ
W3724 X 24 DP BUTT	2	DR18.524 BUTT	DR18.524 BUTT SD	DGI-18.524 BUTT	1	37" SHELF 3/4	37" SHELF ADJ
W3724 X 24 DP BUTT	2	DR18.524 BUTT	DR18.524 BUTT SD	DGI-18.524 BUTT	1	37" SHELF 3/4	37" SHELF ADJ
W3924 X 24 DP	2	DR1924	DR1924 SD	DGI-1924	1	39" SHELF 3/4	39"' SHELF ADJ
REFRIGERATOR WALL • 21" HIGH X 24" DEEP							
W3021 X 24 DP BUTT	2	DR1521 BUTT	DR1521 BUTT SD	DGI-1521 BUTT	-	N/A	N/A
W3321 X 24 DP BUTT	2	DR1621 BUTT	DR1621 BUTT SD	DGI-1621 BUTT	-	N/A	N/A
W3621 X 24 DP BUTT	2	DR1821 BUTT	DR1821 BUTT SD	DGI-1821 BUTT	-	N/A	N/A
W3721 X 24 DP BUTT	2	DR18.521 BUTT	DR18.521 BUTT SD	DGI-18.521 BUTT	-	N/A	N/A
W3921 X 24 DP BUTT	2	DR1921	DR1921 SD	DGI-1921	-	N/A	N/A

SKU	Qty	DOOR Part Name	SPECIALTY DOOR Part Name	GLASS INSERT Part Name	Qty	ADJUSTABLE SHELF *For All Plywood Construction and/or Matching Interior Adjustable Shelf, refer to Parts Directory legend PORTFOLIO SELECT & PORTFOLIO *Part Name	VALUE BUILT *Part Name
REFRIGERATOR WALL - 18" HIGH X 24" DEEP							
W3018 X 24 DP BUTT	2	DR1518 BUTT	DR1518 BUTT SD	DGI-1518 BUTT	-	N/A	N/A
W3318 X 24 DP BUTT	2	DR1618 BUTT	DR1618 BUTT SD	DGI-1618 BUTT	-	N/A	N/A
W3618 X 24 DP BUTT	2	DR1818 BUTT	DR1818 BUTT SD	DGI-1818 BUTT	-	N/A	N/A
W3718 X 24 DP BUTT	2	DR18.518 BUTT	DR18.518 BUTT SD	DGI-18.518 BUTT	-	N/A	N/A
W3918 X 24 DP	2	DR1918	DR1918 SD	DGI-1918	-	N/A	N/A
REFRIGERATOR WALL - 15" HIGH X 24" DEEP							
W3015 X 24 DP BUTT	2	DR1515 BUTT	DR1515 BUTT SD	DGI-1515 BUTT	-	N/A	N/A
W3315 X 24 DP BUTT	2	DR1615 BUTT	DR1615 BUTT SD	DGI-1615 BUTT	-	N/A	N/A
W3615 X 24 DP BUTT	2	DR1815 BUTT	DR1815 BUTT SD	DGI-1815 BUTT	-	N/A	N/A
W3715 X 24 DP BUTT	2	DR18.515 BUTT	DR18.515 BUTT SD	DGI-18.515 BUTT	-	N/A	N/A
W3915 X 24 DP	2	DR1915	DR1915 SD	DGI-1915	-	N/A	N/A
REFRIGERATOR WALL - 12" HIGH X 24" DEEP							
W3012 X 24 DP BUTT	2	DR1512 BUTT	DR1512 BUTT SD	DGI-1512 BUTT	-	N/A	N/A
W3312 X 24 DP BUTT	2	DR1612 BUTT	DR1612 BUTT SD	DGI-1621 BUTT	-	N/A	N/A
W3612 X 24 DP BUTT	2	DR1812 BUTT	DR1812 BUTT SD	DGI-1812 BUTT	-	N/A	N/A
W3912 X 24 DP	2	DR1912	DR1912 SD	DGI-1912	-	N/A	N/A
W3712 X 24 DP BUTT	2	DR18.512 BUTT	DR18.512 BUTT SD	DGI-18.512 BUTT	-	N/A	N/A
W4212 X 24 DP	2	DR2112	N/A	N/A	-	N/A	N/A
W4812 X 24 DP BUTT	4	DR1212 BUTT	N/A	N/A	-	N/A	N/A
STRAIGHT APPLIANCE GARAGE							
AGSD24 BUTT	2	DR1218 BUTT	DR1218 BUTT SD	DGI-1218 BUTT	-	N/A	N/A
CORNER APPLIANCE GARAGE							
AGD2418	1	DR1518	DR1518 SD	DGI-1518	-	N/A	N/A
AGD2718	1	DR1518	DR1518 SD	DGI-1518	-	N/A	N/A

SKU	Qty	DOOR Part Name	Qty	ADJUSTABLE SHELF *For All Plywood Construction and/or Matching Interior Adjustable Shelf, refer to Parts Directory legend PORTFOLIO SELECT & PORTFOLIO *Part Name	VALUE BUILT *Part Name
MICROWAVE WALL ▪ 42" HIGH					
WMC301842 BUTT	2	DR1521 BUTT	-	N/A	N/A
WMC302142 BUTT	2	DR1521 BUTT	-	N/A	N/A
WALL MICROWAVE ▪ 42" HIGH					
WMSC271842 BUTT	2	DR1324 BUTT	1	WMSC2718 TOP SHELF	WMSC2718 TOP SHELF
WALL MICROWAVE ▪ 39" HIGH					
WMC301839 BUTT	2	DR1518 BUTT	-	N/A	N/A
WMC302139 BUTT	2	DR1518 BUTT	-	N/A	N/A
WALL MICROWAVE ▪ 36" HIGH					
WMC301836 BUTT	2	DR1515 BUTT	-	N/A	N/A
WMC302136 BUTT	2	DR1515 BUTT	-	N/A	N/A
WALL MICROWAVE ▪ 36" HIGH					
WMSC271236 BUTT	2	DR1315 BUTT	-	N/A	N/A
WMSC271836 BUTT	2	DR1315 BUTT	-	N/A	N/A
WMSC301236 BUTT	2	DR1515 BUTT	-	N/A	N/A
COMPACT WALL MICROWAVE					
WCMSC241236 BUTT	2	DR1218 BUTT	-	N/A	N/A
WCMSC271236 BUTT	2	DR1318 BUTT	-	N/A	N/A
WALL RANGE HOOD ▪ 30" HIGH					
WRH3030 SV	2	DR1521 BUTT	-	N/A	N/A
WRH3630 SV	2	DR1821 BUTT	-	N/A	N/A
WRH3030 RP	2	DR1521 BUTT	-	N/A	N/A
WRH3630 RP	2	DR1821 BUTT	-	N/A	N/A
WALL RANGE HOOD ▪ 27" HIGH					
WRH3027 SV	2	DR1518 BUTT	-	N/A	N/A
WRH3627 SV	2	DR1818 BUTT	-	N/A	N/A
WRH3027 RP	2	DR1518 BUTT	-	N/A	N/A
WRH3627 RP	2	DR1818 BUTT	-	N/A	N/A
WALL RANGE HOOD ▪ 24" HIGH					
WRH3024 SV	2	DR1515 BUTT	-	N/A	N/A
WRH3624 SV	2	DR1815 BUTT	-	N/A	N/A
WRH3024 RP	2	DR1515 BUTT	-	N/A	N/A
WRH3624 RP	2	DR1815 BUTT	-	N/A	N/A
WALL EASY REACH					
WER2442	1 1	DR1242 WER DRILL DR1242 WER ND	3	WER SHELF 3/4	WER SHELF
WER2439	1 1	DR1239 WER DRILL DR1239 WER ND	3	WER SHELF 3/4	N/A
WER2436	1 1	DR1236 WER DRILL DR1236 WER ND	2	WER SHELF 3/4	WER SHELF
WER2430	1 1	DR1230 WER DRILL DR1230 WER ND	2	WER SHELF 3/4	WER SHELF

Notes

SKU	Qty	DOOR Part Name	Qty	DRAWER FRONT Part Name	Qty	DRAWER BODY PORTFOLIO SELECT Part Name	 PORTFOLIO Part Name	 VALUE BUILT Part Name
STANDARD BASE								
B12	1	DR1224	1	DDF12	1	DRB12 X 21DP DT FD	DRB12 X 21DP SG	DRB12 X 18DP SG
B15	1	DR1524	1	DDF15	1	DRB15 X 21DP DT FD	DRB15 X 21DP SG	DRB15 X 18DP SG
B18	1	DR1824	1	DDF18	1	DRB18 X 21DP DT FD	DRB18 X 21DP SG	DRB18 X 18DP SG
B21	1	DR2124	1	DDF21	1	DRB21 X 21DP DT FD	DRB21 X 21DP SG	DRB21 X 18DP SG
B24	1	DR2424	1	DDF24	1	DRB24 X 21DP DT FD	DRB24 X 21DP SG	DRB24 X 18DP SG
B24 BUTT	2	DR1224 BUTT	1	DDF24	1	DRB24 X 21DP DT FD	DRB24 X 21DP SG	DRB24 X 18DP SG
B27 BUTT	2	DR1324 BUTT	1	DDF27	1	DRB27 X 21DP DT FD	DRB27 X 21DP SG	DRB27 X 18DP SG
B30 BUTT	2	DR1524 BUTT	1	DDF30	1	DRB30 X 21DP DT FD	DRB30 X 21DP SG	DRB30 X 18DP SG
B33 BUTT	2	DR1624 BUTT	1	DDF33	1	DRB33 X 21DP DT FD	DRB33 X 21DP SG	DRB33 X 18DP SG
B36 1TD BUTT	2	DR1824 BUTT	1	DDF36	1	DRB36 X 21DP DT FD	DRB36 X 21DP SG	DRB36 X 18DP SG
B39	2	DR1924	2	DDF19	2	DRB19 X 21DP DT FD	DRB19 X 21DP SG	DRB19 X 18DP SG
B42	2	DR2124	2	DDF21	2	DRB21 X 21DP DT FD	DRB21 X 21DP SG	DRB21 X 18DP SG
B45	3	DR1524	3	DDF15	3	DRB15 X 21DP DT FD	DRB15 X 21DP SG	DRB15 X 18DP SG
B48	2	DR2424	2	DDF24	2	DRB24 X 21DP DT FD	DRB24 X 21DP SG	DRB24 X 18DP SG
BASE WITH ONE SLIDING SHELF								
B12 SS1	1	DR1224	1	DDF12	1	DRB12 X 21DP DT FD	DRB12 X 21DP SG	DRB12 X 18DP SG
B15 SS1	1	DR1524	1	DDF15	1	DRB15 X 21DP DT FD	DRB15 X 21DP SG	DRB15 X 18DP SG
B18 SS1	1	DR1824	1	DDF18	1	DRB18 X 21DP DT FD	DRB18 X 21DP SG	DRB18 X 18DP SG
B21 SS1	1	DR2124	1	DDF21	1	DRB21 X 21DP DT FD	DRB21 X 21DP SG	DRB21 X 18DP SG
B24 SS1	1	DR2424	1	DDF24	1	DRB24 X 21DP DT FD	DRB24 X 21DP SG	DRB24 X 18DP SG
B24 SS1 BUTT	2	DR1224 BUTT	1	DDF24	1	DRB24 X 21DP DT FD	DRB24 X 21DP SG	DRB24 X 18DP SG
B27 SS1 BUTT	2	DR1324 BUTT	1	DDF27	1	DRB27 X 21DP DT FD	DRB27 X 21DP SG	DRB27 X 18DP SG
B30 SS1 BUTT	2	DR1524 BUTT	1	DDF30	1	DRB30 X 21DP DT FD	DRB30 X 21DP SG	DRB30 X 18DP SG
B33 SS1 BUTT	2	DR1624 BUTT	1	DDF33	1	DRB33 X 21DP DT FD	DRB33 X 21DP SG	DRB33 X 18DP SG
B36 SS1 1TD BUTT	2	DR1824 BUTT	1	DDF36	1	DRB36 X 21DP DT FD	DRB36 X 21DP SG	DRB36 X 18DP SG
BASE WITH TWO HORIZONTAL SLIDING SHELVES								
B39 SS1	2	DR1924	2	DDF19	2	DRB19 X 21DP DT FD	DRB19 X 21DP SG	DRB19 X 18DP SG
B42 SS1	2	DR2124	2	DDF21	2	DRB21 X 21DP DT FD	DRB21 X 21DP SG	DRB21 X 18DP SG
B48 SS1	2	DR2424	2	DDF24	2	DRB24 X 21DP DT FD	DRB24 X 21DP SG	DRB24 X 18DP SG
BASE WITH TWO VERTICAL SLIDING SHELVES								
B12 SS2	1	DR1224	1	DDF12	1	DRB12 X 21DP DT FD	DRB12 X 21DP SG	DRB12 X 18DP SG
B15 SS2	1	DR1524	1	DDF15	1	DRB15 X 21DP DT FD	DRB15 X 21DP SG	DRB15 X 18DP SG
B18 SS2	1	DR1824	1	DDF18	1	DRB18 X 21DP DT FD	DRB18 X 21DP SG	DRB18 X 18DP SG
B21 SS2	1	DR2124	1	DDF21	1	DRB21 X 21DP DT FD	DRB21 X 21DP SG	DRB21 X 18DP SG
B24 SS2	1	DR2424	1	DDF24	1	DRB24 X 21DP DT FD	DRB24 X 21DP SG	DRB24 X 18DP SG
B24 SS2 BUTT	2	DR1224 BUTT	1	DDF24	1	DRB24 X 21DP DT FD	DRB24 X 21DP SG	DRB24 X 18DP SG
B27 SS2 BUTT	2	DR1324 BUTT	1	DDF27	1	DRB27 X 21DP DT FD	DRB27 X 21DP SG	DRB27 X 18DP SG
B30 SS2 BUTT	2	DR1524 BUTT	1	DDF30	1	DRB30 X 21DP DT FD	DRB30 X 21DP SG	DRB30 X 18DP SG
B33 SS2 BUTT	2	DR1624 BUTT	1	DDF33	1	DRB33 X 21DP DT FD	DRB33 X 21DP SG	DRB33 X 18DP SG
B36 SS2 1TD BUTT	2	DR1824 BUTT	1	DDF36	1	DRB36 X 21DP DT FD	DRB36 X 21DP SG	DRB36 X 18DP SG
BASE WITH THREE HORIZONTAL SLIDING SHELVES								
B45 SS1	3	DR1524	3	DDF15	3	DRB15 X 21DP DT FD	DRB15 X 21DP SG	DRB15 X 18DP SG
BASE WITH FOUR SLIDING SHELVES								
B39 SS2	2	DR1924	2	DDF19	2	DRB19 X 21DP DT FD	DRB19 X 21DP SG	DRB19 X 18DP SG
B42 SS2	2	DR2124	2	DDF21	2	DRB21 X 21DP DT FD	DRB21 X 21DP SG	DRB21 X 18DP SG
B48 SS2	2	DR2424	2	DDF24	2	DRB24 X 21DP DT FD	DRB24 X 21DP SG	DRB24 X 18DP SG
BASE WITH SIX SLIDING SHELVES								
B45 SS2	3	DR1524	3	DDF15	3	DRB15 X 21DP DT FD	DRB15 X 21DP SG	DRB15 X 18DP SG

SKU	Qty	SHELF / ACCESSORY	
		*For All Plywood Construction Adjustable Shelf, refer to Parts Directory legend	
		PORTFOLIO SELECT & PORTFOLIO	VALUE BUILT
		*Part Name	Part Name
STANDARD BASE			
B12	1	12" SHELF 3/4	12" SHELF
B15	1	15" SHELF 3/4	15" SHELF
B18	1	18" SHELF 3/4	18" SHELF
B21	1	21" SHELF 3/4	21" SHELF
B24	1	24" SHELF 3/4	24" SHELF
B24 BUTT	1	24" SHELF 3/4	24" SHELF
B27 BUTT	1	27" SHELF 3/4	27" SHELF ADJ
B30 BUTT	1	30" SHELF 3/4	30" SHELF ADJ
B33 BUTT	1	33" SHELF 3/4	33" SHELF ADJ
B36 1TD BUTT	1	36" SHELF 3/4	36" SHELF ADJ
B39	1	39" SHELF 3/4	39" SHELF ADJ
B42	1	42" SHELF 3/4	42" SHELF ADJ
B45	1	45" SHELF 3/4	45" SHELF ADJ
B48	1	48" SHELF 3/4	48" SHELF ADJ
BASE WITH ONE SLIDING SHELF			
B12 SS1	1	SSK12	SSK12
B15 SS1	1	SSK15	SSK15
B18 SS1	1	SSK18	SSK18
B21 SS1	1	SSK21	SSK21
B24 SS1	1	SSK24	SSK24
B24 SS1 BUTT	1	SSK24	SSK24
B27 SS1 BUTT	1	SSK27	SSK27
B30 SS1 BUTT	1	SSK30	SSK30
B33 SS1 BUTT	1	SSK33	SSK33
B36 SS1 1TD BUTT	1	SSK36	SSK36
BASE WITH TWO HORIZONTAL SLIDING SHELVES			
B39 SS1	2	SSK19	SSK19
B42 SS1	2	SSK21	SSK21
B48 SS1	2	SSK24	SSK24
BASE WITH TWO VERTICAL SLIDING SHELVES			
B12 SS2	2	SSK12	SSK12
B15 SS2	2	SSK15	SSK15
B18 SS2	2	SSK18	SSK18
B21 SS2	2	SSK21	SSK21
B24 SS2	2	SSK24	SSK24
B24 SS2 BUTT	2	SSK24	SSK24
B27 SS2 BUTT	2	SSK27	SSK27
B30 SS2 BUTT	2	SSK30	SSK30
B33 SS2 BUTT	2	SSK33	SSK33
B36 SS2 1TD BUTT	2	SSK36	SSK36
BASE WITH THREE HORIZONTAL SLIDING SHELVES			
B45 SS1	3	SSK15	SSK15
BASE WITH FOUR SLIDING SHELVES			
B39 SS2	4	SSK19	SSK19
B42 SS2	4	SSK21	SSK21
B48 SS2	4	SSK24	SSK24
BASE WITH SIX SLIDING SHELVES			
B45 SS2	6	SSK15	SSK15

SKU	Qty	DOOR Part Name	Qty	DRAWER FRONT Part Name	Qty	DRAWER BODY PORTFOLIO SELECT Part Name	DRAWER BODY PORTFOLIO Part Name	DRAWER BODY VALUE BUILT Part Name
BASE POT AND PAN ORGANIZER CABINET								
B24 CCBPPO	1	DR2424	1	DDF24	1	DRB24 X 21DP DT FD	DRB24 X 21DP SG	N/A
B24 BUTT CCBPPO	2	DR1224 BUTT	1	DDF24	1	DRB24 X 21DP DT FD	DRB24 X 21DP SG	N/A
B27 BUTT CCBPPO	2	DR1324 BUTT	1	DDF27	1	DRB27 X 21DP DT FD	DRB27 X 21DP SG	N/A
B30 BUTT CCBPPO	2	DR1524 BUTT	1	DDF30	1	DRB30 X 21DP DT FD	DRB30 X 21DP SG	N/A
B33 BUTT CCBPPO	2	DR1624 BUTT	1	DDF33	1	DRB33 X 21DP DT FD	DRB33 X 21DP SG	N/A
B36 1TD BUTT CCBPPO	2	DR1824 BUTT	1	DDF36	1	DRB36 X 21DP DT FD	DRB36 X 21DP SG	N/A
PENINSULA BASE								
PB12	2	DR1224	2	DDF12	2	DRB12 X 21DP DT FD	DRB12 X 21DP SG	DRB12 X 18DP SG
PB18	2	DR1824	2	DDF18	2	DRB18 X 21DP DT FD	DRB18 X 21DP SG	DRB18 X 18DP SG
PB24	2	DR2424	2	DDF24	2	DRB24 X 21DP DT FD	DRB24 X 21DP SG	DRB24 X 18DP SG
PB24 BUTT	4	DR1224 BUTT	2	DDF24	2	DRB24 X 21DP DT FD	DRB24 X 21DP SG	DRB24 X 18DP SG
PB30 BUTT	4	DR1524 BUTT	2	DDF30	2	DRB30 X 21DP DT FD	DRB30 X 21DP SG	DRB30 X 18DP SG
PB36 1TD BUTT	4	DR1824 BUTT	2	DDF36	2	DRB36 X 21DP DT FD	DRB36 X 21DP SG	DRB36 X 18DP SG
PB42	4	DR2124	4	DDF21	4	DRB21 X 21DP DT FD	DRB21 X 21DP SG	DRB21 X 18DP SG
BLIND CORNER								
BLB36/39	1	DR1224	1	DDF12	1	DRB12 X 21DP DT FD	DRB12 X 21DP SG	DRB12 X 18DP SG
BLB39/42	1	DR1524	1	DDF15	1	DRB15 X 21DP DT FD	DRB15 X 21DP SG	DRB15 X 18DP SG
BLB42/45	1	DR1824	1	DDF18	1	DRB18 X 21DP DT FD	DRB18 X 21DP SG	DRB18 X 18DP SG
BLB45/48	1	DR2124	1	DDF21	1	DRB21 X 21DP DT FD	DRB21 X 21DP SG	DRB21 X 18DP SG
BLB48/51	1	DR2124	1	DDF21	1	DRB21 X 21DP DT FD	DRB21 X 21DP SG	DRB21 X 18DP SG
STANDARD BASE WITH FACTORY INSTALLED CUTLERY DIVIDER								
B15 CD	1	DR1524	1	DDF15	1	DRB15 X 21DP DT FD	DRB15 X 21DP DT FD	N/A
B18 CD	1	DR1824	1	DDF18	1	DRB18 X 21DP DT FD	DRB18 X 21DP DT FD	N/A
B21 CD	1	DR2124	1	DDF21	1	DRB21 X 21DP DT FD	DRB21 X 21DP DT FD	N/A
B24 CD	1	DR2424	1	DDF24	1	DRB24 X 21DP DT FD	DRB24 X 21DP DT FD	N/A
B24 BUTT CD	2	DR1224 BUTT	1	DDF24	1	DRB24 X 21DP DT FD	DRB24 X 21DP DT FD	N/A
B30 BUTT CD	2	DR1524 BUTT	1	DDF30	1	DRB30 X 21DP DT FD	DRB30 X 21DP DT FD	N/A
B36 1TD BUTT CD	2	DR1824 BUTT	1	DDF36	1	DRB36 X 21DP DT FD	DRB36 X 21DP DT FD	N/A
STANDARD BASE WITH FACTORY INSTALLED SPICE DRAWER INSERT								
B15 SDI	1	DR1524	1	DDF15	1	DRB15 X 21DP DT FD	DRB15 X 21DP DT FD	N/A
B18 SDI	1	DR1824	1	DDF18	1	DRB18 X 21DP DT FD	DRB18 X 21DP DT FD	N/A
B21 SDI	1	DR2124	1	DDF21	1	DRB21 X 21DP DT FD	DRB21 X 21DP DT FD	N/A
B24 SDI	1	DR2424	1	DDF24	1	DRB24 X 21DP DT FD	DRB24 X 21DP DT FD	N/A
B24 BUTT SDI	2	DR1224 BUTT	1	DDF24	1	DRB24 X 21DP DT FD	DRB24 X 21DP DT FD	N/A

SKU	Qty	SHELF / ACCESSORY	
		*For All Plywood Construction Adjustable Shelf, refer to Parts Directory legend	
		PORTFOLIO SELECT & PORTFOLIO	**VALUE BUILT**
		*Part Name	Part Name
BASE POT AND PAN ORGANIZER CABINET			
B24 CCBPPO	1	BPPOKCC24	N/A
B24 BUTT CCBPPO	1	BPPOKCC24	N/A
B27 BUTT CCBPPO	1	BPPOKCC27	N/A
B30 BUTT CCBPPO	1	BPPOKCC30	N/A
B33 BUTT CCBPPO	1	BPPOKCC33	N/A
B36 1TD BUTT CCBPPO	1	BPPOKCC36	N/A
PENINSULA BASE			
PB12	1	12" SHELF PB 3/4	12" SHELF PB
PB18	1	18" SHELF PB 3/4	18" SHELF PB
PB24	1	24" SHELF PB 3/4	24" SHELF PB
PB24 BUTT	1	24" SHELF PB 3/4	24" SHELF PB
PB30 BUTT	1	30" SHELF PB 3/4	30" SHELF PB
PB36 1TD BUTT	1	36" SHELF PB 3/4	36" SHELF PB
PB42	1	42" SHELF PB 3/4	42" SHELF PB
BLIND CORNER			
BLB36/39	1	27" SHELF 3/4	27" SHELF ADJ
BLB39/42	1	33" SHELF 3/4	33" SHELF ADJ
BLB42/45	1	39" SHELF 3/4	39" SHELF ADJ
BLB45/48	1	45" SHELF 3/4	45" SHELF ADJ
BLB48/51	1	48" SHELF 3/4	48" SHELF ADJ
STANDARD BASE WITH FACTORY INSTALLED CUTLERY DIVIDER			
B15 CD	1	15" SHELF 3/4	N/A
	1	CDAK15	
B18 CD	1	18" SHELF 3/4	N/A
	1	CDAK18	
B21 CD	1	21" SHELF 3/4	N/A
	1	CDAK21	
B24 CD	1	24" SHELF 3/4	N/A
	1	CDAK24	
B24 BUTT CD	1	24" SHELF 3/4	N/A
	1	CDAK24	
B30 BUTT CD	1	30" SHELF 3/4	N/A
	1	CDAK30	
B36 1TD BUTT CD	1	36" SHELF 3/4	N/A
	1	CDAK36	
STANDARD BASE WITH FACTORY INSTALLED SPICE DRAWER INSERT			
B15 SDI	1	15" SHELF 3/4	N/A
	1	SDIAK15	
B18 SDI	1	18" SHELF 3/4	N/A
	1	SDIAK18	
B21 SDI	1	21" SHELF 3/4	N/A
	1	SDIAK21	
B24 SDI	1	24" SHELF 3/4	N/A
	1	SDIAK24	
B24 BUTT SDI	1	24" SHELF 3/4	N/A
	1	SDIAK24	

SKU	Qty	DOOR Part Name	Qty	DRAWER FRONT Part Name	Qty	DRAWER BODY PORTFOLIO SELECT Part Name	PORTFOLIO Part Name	VALUE BUILT Part Name
STANDARD BASE WITH FACTORY INSTALLED WOOD TIERED CUTLERY DIVIDER								
B15 WTCD	1	DR1524	1	DDF15	1	WTCDKFD15	WTCDKFD15	N/A
B18 WTCD	1	DR1824	1	DDF18	1	WTCDKFD18	WTCDKFD18	N/A
B21 WTCD	1	DR2124	1	DDF21	1	WTCDKFD21	WTCDKFD21	N/A
B24 WTCD	1	DR2424	1	DDF24	1	WTCDKFD24	WTCDKFD24	N/A
B24 BUTT WTCD	2	DR1224 BUTT	1	DDF24	1	WTCDKFD24	WTCDKFD24	N/A
B30 BUTT WTCD	2	DR1524 BUTT	1	DDF30	1	WTCDKFD30	WTCDKFD30	N/A
B36 1TD BUTT WTCD	2	DR1824 BUTT	1	DDF36	1	WTCDKFD36	WTCDKFD36	N/A
BASE WITH ONE SLIDING SHELF AND FACTORY INSTALLED CUTLERY DIVIDER								
B15 SS1 CD	1	DR1524	1	DDF15	1	DRB15 X 21DP DT FD	DRB15 X 21DP DT FD	N/A
B18 SS1 CD	1	DR1824	1	DDF18	1	DRB18 X 21DP DT FD	DRB18 X 21DP DT FD	N/A
B21 SS1 CD	1	DR2124	1	DDF21	1	DRB21 X 21DP DT FD	DRB21 X 21DP DT FD	N/A
B24 SS1 CD	1	DR2424	1	DDF24	1	DRB24 X 21DP DT FD	DRB24 X 21DP DT FD	N/A
B24 SS1 BUTT CD	2	DR1224 BUTT	1	DDF24	1	DRB24 X 21DP DT FD	DRB24 X 21DP DT FD	N/A
B30 SS1 BUTT CD	2	DR1524 BUTT	1	DDF30	1	DRB30 X 21DP DT FD	DRB30 X 21DP DT FD	N/A
B36 SS1 1TD BUTT CD	2	DR1824 BUTT	1	DDF36	1	DRB36 X 21DP DT FD	DRB36 X 21DP DT FD	N/A
BASE WITH ONE SLIDING SHELF AND FACTORY INSTALLED SPICE DRAWER INSERT								
B15 SS1 SDI	1	DR1524	1	DDF15	1	DRB15 X 21DP DT FD	DRB15 X 21DP DT FD	N/A
B18 SS1 SDI	1	DR1824	1	DDF18	1	DRB18 X 21DP DT FD	DRB18 X 21DP DT FD	N/A
B21 SS1 SDI	1	DR2124	1	DDF21	1	DRB21 X 21DP DT FD	DRB21 X 21DP DT FD	N/A
B24 SS1 SDI	1	DR2424	1	DDF24	1	DRB24 X 21DP DT FD	DRB24 X 21DP DT FD	N/A
B24 SS1 BUTT SDI	2	DR1224 BUTT	1	DDF24	1	DRB24 X 21DP DT FD	DRB24 X 21DP DT FD	N/A
BASE WITH ONE SLIDING SHELF AND FACTORY INSTALLED WOOD TIERED CUTLERY DIVIDER								
B15 SS1 WTCD	1	DR1524	1	DDF15	1	WTCDKFD15	WTCDKFD15	N/A
B18 SS1 WTCD	1	DR1824	1	DDF18	1	WTCDKFD18	WTCDKFD18	N/A
B21 SS1 WTCD	1	DR2124	1	DDF21	1	WTCDKFD21	WTCDKFD21	N/A
B24 SS1 WTCD	1	DR2424	1	DDF24	1	WTCDKFD24	WTCDKFD24	N/A
B24 SS1 BUTT WTCD	2	DR1224 BUTT	1	DDF24	1	WTCDKFD24	WTCDKFD24	N/A
B30 SS1 BUTT WTCD	2	DR1524 BUTT	1	DDF30	1	WTCDKFD30	WTCDKFD30	N/A
B36 1TD SS1 BUTT WTCD	2	DR1824 BUTT	1	DDF36	1	WTCDKFD36	WTCDKFD36	N/A

SKU	Qty	SHELF / ACCESSORY	
		*For All Plywood Construction Adjustable Shelf, refer to Parts Directory legend	
		PORTFOLIO SELECT & PORTFOLIO	VALUE BUILT
		*Part Name	Part Name
STANDARD BASE WITH FACTORY INSTALLED WOOD TIERED CUTLERY DIVIDER			
B15 WTCD	1	15" SHELF 3/4	N/A
B18 WTCD	1	18" SHELF 3/4	N/A
B21 WTCD	1	21" SHELF 3/4	N/A
B24 WTCD	1	24" SHELF 3/4	N/A
B24 BUTT WTCD	1	24" SHELF 3/4	N/A
B30 BUTT WTCD	1	30" SHELF 3/4	N/A
B36 1TD BUTT WTCD	1	36" SHELF 3/4	N/A
BASE WITH ONE SLIDING SHELF AND FACTORY INSTALLED CUTLERY DIVIDER			
B15 SS1 CD	1	SSK15	N/A
	1	CDAK15	
B18 SS1 CD	1	SSK18	N/A
	1	CDAK18	
B21 SS1 CD	1	SSK21	N/A
	1	CDAK21	
B24 SS1 CD	1	SSK24	N/A
	1	CDAK24	
B24 SS1 BUTT CD	1	SSK24	N/A
	1	CDAK24	
B30 SS1 BUTT CD	1	SSK30	N/A
	1	CDAK30	
B36 SS1 1TD BUTT CD	1	SSK36	N/A
	1	CDAK36	
BASE WITH ONE SLIDING SHELF AND FACTORY INSTALLED SPICE DRAWER INSERT			
B15 SS1 SDI	1	SSK15	N/A
	1	SDIAK15	
B18 SS1 SDI	1	SSK18	N/A
	1	SDIAK18	
B21 SS1 SDI	1	SSK21	N/A
	1	SDIAK21	
B24 SS1 SDI	1	SSK24	N/A
	1	SDIAK24	
B24 SS1 BUTT SDI	1	SSK24	N/A
	1	SDIAK24	
BASE WITH ONE SLIDING SHELF AND FACTORY INSTALLED WOOD TIERED CUTLERY DIVIDER			
B15 SS1 WTCD	1	SSK15	N/A
B18 SS1 WTCD	1	SSK18	N/A
B21 SS1 WTCD	1	SSK21	N/A
B24 SS1 WTCD	1	SSK24	N/A
B24 SS1 BUTT WTCD	1	SSK24	N/A
B30 SS1 BUTT WTCD	1	SSK30	N/A
B36 1TD SS1 BUTT WTCD	1	SSK36	N/A

SKU	Qty	DOOR Part Name	Qty	DRAWER FRONT Part Name	Qty	DRAWER BODY PORTFOLIO SELECT Part Name	PORTFOLIO Part Name	VALUE BUILT Part Name
BASE WITH TWO SLIDING SHELVES AND FACTORY INSTALLED CUTLERY DIVIDER								
B15 SS2 CD	1	DR1524	1	DDF15	1	DRB15 X 21DP DT FD	DRB15 X 21DP DT FD	N/A
B18 SS2 CD	1	DR1824	1	DDF18	1	DRB18 X 21DP DT FD	DRB18 X 21DP DT FD	N/A
B21 SS2 CD	1	DR2124	1	DDF21	1	DRB21 X 21DP DT FD	DRB21 X 21DP DT FD	N/A
B24 SS2 CD	1	DR2424	1	DDF24	1	DRB24 X 21DP DT FD	DRB24 X 21DP DT FD	N/A
B24 SS2 BUTT CD	2	DR1224 BUTT	1	DDF24	1	DRB24 X 21DP DT FD	DRB24 X 21DP DT FD	N/A
B30 SS2 BUTT CD	2	DR1524 BUTT	1	DDF30	1	DRB30 X 21DP DT FD	DRB30 X 21DP DT FD	N/A
B36 1TD SS2 BUTT CD	2	DR1824 BUTT	1	DDF36	1	DRB36 X 21DP DT FD	DRB36 X 21DP DT FD	N/A
BASE WITH TWO SLIDING SHELVES AND FACTORY INSTALLED SPICE DRAWER INSERT								
B15 SS2 SDI	1	DR1524	1	DDF15	1	DRB15 X 21DP DT FD	DRB15 X 21DP DT FD	N/A
B18 SS2 SDI	1	DR1824	1	DDF18	1	DRB18 X 21DP DT FD	DRB18 X 21DP DT FD	N/A
B21 SS2 SDI	1	DR2124	1	DDF21	1	DRB21 X 21DP DT FD	DRB21 X 21DP DT FD	N/A
B24 SS2 SDI	1	DR2424	1	DDF24	1	DRB24 X 21DP DT FD	DRB24 X 21DP DT FD	N/A
B24 SS2 BUTT SDI	2	DR1224 BUTT	1	DDF24	1	DRB24 X 21DP DT FD	DRB24 X 21DP DT FD	N/A
BASE WITH TWO SLIDING SHELVES AND FACTORY INSTALLED WOOD TIERED CUTLERY DIVIDER								
B15 SS2 WTCD	1	DR1524	1	DDF15	1	WTCDKFD15	WTCDKFD15	N/A
B18 SS2 WTCD	1	DR1824	1	DDF18	1	WTCDKFD18	WTCDKFD18	N/A
B21 SS2 WTCD	1	DR2124	1	DDF21	1	WTCDKFD21	WTCDKFD21	N/A
B24 SS2 WTCD	1	DR2424	1	DDF24	1	WTCDKFD24	WTCDKFD24	N/A
B24 SS2 BUTT WTCD	2	DR1224 BUTT	1	DDF24	1	WTCDKFD24	WTCDKFD24	N/A
B30 SS2 BUTT WTCD	2	DR1524 BUTT	1	DDF30	1	WTCDKFD30	WTCDKFD30	N/A
B36 SS2 BUTT WTCD	2	DR1824 BUTT	1	DDF36	1	WTCDKFD36	WTCDKFD36	N/A
BASE WITH ROLL OUT TRAY DIVIDER								
B12 CCROTD	1	DR1224	1	DDF12	1	DRB12 X 21DP DT FD	DRB12 X 21DP SG	N/A
B15 CCROTD	1	DR1524	1	DDF15	1	DRB15 X 21DP DT FD	DRB15 X 21DP SG	N/A
BASE WITH BOTTOM MOUNT WASTEBASKET(S)								
BWBB15	1	DR1524 ND	1	DDF15	1	DRB15 X 21DP DT FD	DRB15 X 21DP SG	DRB15 X 18DP SG
BWBB15-2	1	DR1524 ND	1	DDF15	1	DRB15 X 21DP DT FD	DRB15 X 21DP SG	DRB15 X 18DP SG
BWBB18-2	1	DR1824 ND	1	DDF18	1	DRB18 X 21DP DT FD	DRB18 X 21DP SG	DRB18 X 18DP SG
BWBB21-2	1	DR2124 ND	1	DDF21	1	DRB21 X 21DP DT FD	DRB21 X 21DP SG	DRB21 X 18DP SG
BLIND PENINSULA CORNER								
PBC24	1	DR2424	1	DDF24	1	DRB24 X 21DP DT FD	DRB24 X 21DP SG	DRB24 X 18DP SG
PBC24 BUTT	2	DR1224 BUTT	1	DDF24	1	DRB24 X 21DP DT FD	DRB24 X 21DP SG	DRB24 X 18DP SG

SKU	Qty	SHELF / ACCESSORY	
		*For All Plywood Construction Adjustable Shelf, refer to Parts Directory legend	
		PORTFOLIO SELECT & PORTFOLIO	VALUE BUILT
		*Part Name	Part Name
BASE WITH TWO SLIDING SHELVES AND FACTORY INSTALLED CUTLERY DIVIDER			
B15 SS2 CD	2	SSK15	N/A
	1	CDAK15	
B18 SS2 CD	2	SSK18	N/A
	1	CDAK18	
B21 SS2 CD	2	SSK21	N/A
	1	CDAK21	
B24 SS2 CD	2	SSK24	N/A
	1	CDAK24	
B24 SS2 BUTT CD	2	SSK24	N/A
	1	CDAK24	
B30 SS2 BUTT CD	2	SSK30	N/A
	1	CDAK30	
B36 1TD SS2 BUTT CD	2	SSK36	N/A
	1	CDAK36	
BASE WITH TWO SLIDING SHELVES AND FACTORY INSTALLED SPICE DRAWER INSERT			
B15 SS2 SDI	2	SSK15	N/A
	1	SDIAK15	
B18 SS2 SDI	2	SSK18	N/A
	1	SDIAK18	
B21 SS2 SDI	2	SSK21	N/A
	1	SDIAK21	
B24 SS2 SDI	2	SSK24	N/A
	1	SDIAK24	
B24 SS2 BUTT SDI	2	SSK24	N/A
	1	SDIAK24	
BASE WITH TWO SLIDING SHELVES AND FACTORY INSTALLED WOOD TIERED CUTLERY DIVIDER			
B15 SS2 WTCD	2	SSK15	N/A
B18 SS2 WTCD	2	SSK18	N/A
B21 SS2 WTCD	2	SSK21	N/A
B24 SS2 WTCD	2	SSK24	N/A
B24 SS2 BUTT WTCD	2	SSK24	N/A
B30 SS2 BUTT WTCD	2	SSK30	N/A
B36 SS2 BUTT WTCD	2	SSK36	N/A
BASE WITH ROLL OUT TRAY DIVIDER			
B12 CCROTD	1	ROTDKCC12	N/A
B15 CCROTD	1	ROTDKCC15	N/A
BASE WITH BOTTOM MOUNT WASTEBASKET(S)			
BWBB15	1	BWBB15 _OL KIT	BWBB15 _OL KIT
BWBB15-2	1	BWBB15-2 _OL KIT	BWBB15-2 _OL KIT
BWBB18-2	1	BWBB18-2 _OL KIT	BWBB18-2 _OL KIT
BWBB21-2	1	BWBB21-2 _OL KIT	BWBB21-2 _OL KIT
BLIND PENINSULA CORNER			
PBC24	1	24" SHELF PB 3/4	24" SHELF PB
PBC24 BUTT	1	24" SHELF PB 3/4	24" SHELF PB

SKU	Qty	DOORS		Qty	ADJUSTABLE SHELF/ACCESSORY	
		Full Overlay	Standard Overlay		*For All Plywood Construction Adjustable Shelf, refer to Parts Directory legend PORTFOLIO SELECT & PORTFOLIO	VALUE BUILT
	Qty	Part Name	Part Name	Qty	*Part Name	Part Name
FULL HEIGHT BASE						
TB9	1	DR9FH	DR930	-	N/A	N/A
B12 FH	1	DR12FH	DR1230	1	12" SHELF 3/4	12" SHELF
B15 FH	1	DR15FH	DR1530	1	15" SHELF 3/4	15" SHELF
B18 FH	1	DR18FH	DR1830	1	18" SHELF 3/4	18" SHELF
B21 FH	1	DR21FH	DR2130	1	21" SHELF 3/4	21" SHELF
B24 FH	1	DR24FH	DR2430	1	24" SHELF 3/4	24" SHELF
B24 BUTT FH	2	DR12BUTT FH	DR1230 BUTT	1	24" SHELF 3/4	24" SHELF
B27 BUTT FH	2	DR13BUTT FH	DR1330 BUTT	1	27" SHELF 3/4	27" SHELF
B30 BUTT FH	2	DR15BUTT FH	DR1530 BUTT	1	30" SHELF 3/4	30" SHELF ADJ
B33 BUTT FH	2	DR16BUTT FH	DR1630 BUTT	1	33" SHELF 3/4	33" SHELF ADJ
B36 BUTT FH	2	DR18BUTT FH	DR1830 BUTT	1	36" SHELF 3/4	36" SHELF ADJ
FULL HEIGHT BASE WITH ACCESSORY						
TB9 TDS	1	DR9FH	DR930	1	9" SHELF 24 DP 3/4	9" SHELF 24DP
BTDP9	1	DR9FH ND	DR930 ND	1	BTDP9 KIT CC	N/A
BTDP12	1	DR12FH ND	DR1230 ND	1	BTDP12 KIT CC	N/A
BPP9	1	DR9FH ND	DR930 ND	1	BPP9 KIT CC	N/A
BPP12	1	DR12 FH ND	DR1230 ND	1	BPP12 KIT CC	N/A
BPPUS9	1	DR9FH ND	DR930 ND	1	BPPUS9 KIT CC	N/A
BPPUS12	1	DR12FH ND	DR1230 ND	1	BPPUS12 KIT CC	N/A
FULL HEIGHT BASE WITH TWO SLIDING SHELVES						
B12 FH SS2	1	DR12FH	DR1230	2	SSK12	SSK12
B15 FH SS2	1	DR15FH	DR1530	2	SSK15	SSK15
B18 FH SS2	1	DR18FH	DR1830	2	SSK18	SSK18
B21 FH SS2	1	DR21FH	DR2130	2	SSK21	SSK21
B24 FH SS2	1	DR24FH	DR2430	2	SSK24	SSK24
B24 BUTT FH SS2	2	DR12BUTT FH	DR1230 BUTT	2	SSK24	SSK24
B27 BUTT FH SS2	2	DR13BUTT FH	DR1330 BUTT	2	SSK27	SSK27
B30 BUTT FH SS2	2	DR15BUTT FH	DR1530 BUTT	2	SSK30	SSK30
B33 BUTT FH SS2	2	DR16BUTT FH	DR1630 BUTT	2	SSK33	SSK33
B36 BUTT FH SS2	2	DR18BUTT FH	DR1830 BUTT	2	SSK36	SSK36
FULL HEIGHT BASE WITH FOUR SLIDING SHELVES						
B12 FH SS4	1	DR12FH	DR1230	4	SSK12	SSK12
B15 FH SS4	1	DR15FH	DR1530	4	SSK15	SSK15
B18 FH SS4	1	DR18FH	DR1830	4	SSK18	SSK18
B21 FH SS4	1	DR21FH	DR2130	4	SSK21	SSK21
B24 FH SS4	1	DR24FH	DR2430	4	SSK24	SSK24
B24 BUTT FH SS4	2	DR12BUTT FH	DR1230 BUTT	4	SSK24	SSK24
B27 BUTT FH SS4	2	DR13BUTT FH	DR1330 BUTT	4	SSK27	SSK27
B30 BUTT FH SS4	2	DR15BUTT FH	DR1530 BUTT	4	SSK30	SSK30
B33 BUTT FH SS4	2	DR16BUTT FH	DR1630 BUTT	4	SSK33	SSK33
B36 BUTT FH SS4	2	DR18BUTT FH	DR1830 BUTT	4	SSK36	SSK36
FULL-HEIGHT BASE MIXER LIFT						
B18 FH MLK	1	DR21FH	DR2130	1	BMLK18	N/A
FULL-HEIGHT BLIND BASE						
BLB36/39 FH	1	DR12FH	DR1230	1	27" SHELF 3/4	27" SHELF ADJ
BLB39/42 FH	1	DR15FH	DR1530	1	33" SHELF 3/4	33" SHELF ADJ
BLB42/45 FH	1	DR18FH	DR1830	1	39" SHELF 3/4	39" SHELF ADJ
BLB45/48 FH	1	DR21FH	DR2130	1	45" SHELF 3/4	45" SHELF ADJ
BLB48/51 FH	1	DR21FH	DR2130	1	48" SHELF 3/4	48" SHELF ADJ
FULL-HEIGHT BLIND BASE ▪ PULL OUT KIT						
BLB45/48 FH POK	1	DR21FH	DR2130	1	BLBPOK45	N/A
BLB48/51 FH POK	1	DR21FH	DR2130	1	BLBPOK45	N/A

SKU	Qty	DOORS		Qty	ADJUSTABLE SHELF/ACCESSORY	
					*For All Plywood Construction Adjustable Shelf, refer to Parts Directory legend	
		Full Overlay	Standard Overlay		PORTFOLIO SELECT & PORTFOLIO	VALUE BUILT
		Part Name	Part Name		*Part Name	Part Name
FULL-HEIGHT BLIND BASE ▪ SWING OUT KIT						
BLB45/48 FH SOKL	1	DR21FH	DR2130	1	BLBSOK45L	N/A
BLB45/48 FH SOKR	1	DR21FH	DR2130	1	BLBSOK45R	N/A
BLB48/51 FH SOKL	1	DR21FH	DR2130	1	BLBSOK45L	N/A
BLB48/51 FH SOKR	1	DR21FH	DR2130	1	BLBSOK45R	N/A
FULL-HEIGHT BASE WITH BOTTOM MOUNT WASTEBASKET(S)						
BWBB15 FH	1	DR15FH ND	DR1530 ND	1	BWBB15 FH _OL KIT	BWBB15 FH _OL KIT
BWBB18 FH	1	DR18FH ND	DR1830 ND	1	BWBB18 FH _OL KIT	BWBB18 FH _OL KIT
BWBB21-2 FH	1	DR21FH ND	DR2130 ND	1	BWBB21-2 FH _OL KIT	BWBB21-2 FH _OL KIT
BASE END ANGLE						
BEA12 FH	1	DR15FH	DR1530	1	BEA12 SHELF 3/4	BEA12 SHELF
BEA24 FH	2	DR18FH	DR1830	1	BEA SHELF 3/4	BEA SHELF
FULL HEIGHT PENINSULA BASE						
PB12 FH	2	DR12FH	DR1230	1	12" SHELF PB 3/4	12" SHELF PB
PB18 FH	2	DR18FH	DR1830	1	18" SHELF PB 3/4	18" SHELF PB
PB24 BUTT FH	4	DR12BUTT FH	DR1230 BUTT	1	24" SHELF PB 3/4	24" SHELF PB
PB30 BUTT FH	4	DR15BUTT FH	DR1530 BUTT	1	30" SHELF PB 3/4	30" SHELF PB
PB36 BUTT FH	4	DR18BUTT FH	DR1830 BUTT	1	36" SHELF PB 3/4	36" SHELF PB

SKU	Qty	DRAWER FRONT		DRAWER BODY		
		Full Overlay	Standard Overlay	PORTFOLIO SELECT	PORTFOLIO	VALUE BUILT
		Part Name	Part Name	Part Name	Part Name	Part Name
FURNITURE DRAWERS ▪ 12" DEEP ▪ 6" HIGH						
FD121206	1	DDF12	DDF12	DRB12 X 9DP DT FD	DRB12 X 9DP SG	DRB12 X 9DP SG
FD151206	1	DDF15	DDF15	DRB15 X 9DP DT FD	DRB15 X 9DP SG	DRB15 X 9DP SG
FD181206	1	DDF18	DDF18	DRB18 X 9DP DT FD	DRB18 X 9DP SG	DRB18 X 9DP SG
FD211206	1	DDF21	DDF21	DRB21 X 9DP DT FD	DRB21 X 9DP SG	DRB21 X 9DP SG
FD241206	1	DDF24	DDF24	DRB24 X 9DP DT FD	DRB24 X 9DP SG	DRB24 X 9DP SG
FD271206	1	DDF27	DDF27	DRB27 X 9DP DT FD	DRB27 X 9DP SG	DRB27 X 9DP SG
FD301206	1	DDF30	DDF30	DRB30 X 9DP DT FD	DRB30 X 9DP SG	DRB30 X 9DP SG
FD331206	1	DDF33	DDF33	DRB33 X 9DP DT FD	DRB33 X 9DP SG	DRB33 X 9DP SG
FD361206	1	DDF36	DDF36	DRB36 X 9DP DT FD	DRB36 X 9DP SG	DRB36 X 9DP SG
FURNITURE DRAWERS ▪ 24" DEEP ▪ 6" HIGH						
FD122406	1	DDF12	DDF12	DRB12 X 21DP DT FD	DRB12 X 21DP SG	DRB12 X 18DP SG
FD152406	1	DDF15	DDF15	DRB15 X 21DP DT FD	DRB15 X 21DP SG	DRB15 X 18DP SG
FD182406	1	DDF18	DDF18	DRB18 X 21DP DT FD	DRB18 X 21DP SG	DRB18 X 18DP SG
FD212406	1	DDF21	DDF21	DRB21 X 21DP DT FD	DRB21 X 21DP SG	DRB21 X 18DP SG
FD242406	1	DDF24	DDF24	DRB24 X 21DP DT FD	DRB24 X 21DP SG	DRB24 X 18DP SG
FD272406	1	DDF27	DDF27	DRB27 X 21DP DT FD	DRB27 X 21DP SG	DRB27 X 18DP SG
FD302406	1	DDF30	DDF30	DRB30 X 21DP DT FD	DRB30 X 21DP SG	DRB30 X 18DP SG
FD332406	1	DDF33	DDF33	DRB33 X 21DP DT FD	DRB33 X 21DP SG	DRB33 X 18DP SG
FD362406	1	DDF36	DDF36	DRB36 X 21DP DT FD	DRB36 X 21DP SG	DRB36 X 18DP SG
FURNITURE DRAWERS ▪ 12" DEEP ▪ 12" HIGH						
FD121212	1	DDF12M	DDF12D	DRB12M X 9DP DT FD	DRB12M X 9DP SG	DRB12M X 9DP SG
FD151212	1	DDF15M	DDF15D	DRB15M X 9DP DT FD	DRB15M X 9DP SG	DRB15M X 9DP SG
FD181212	1	DDF18M	DDF18D	DRB18M X 9DP DT FD	DRB18M X 9DP SG	DRB18M X 9DP SG
FD211212	1	DDF21M	DDF21D	DRB21M X 9DP DT FD	DRB21M X 9DP SG	DRB21M X 9DP SG
FD241212	1	DDF24M	DDF24D	DRB24M X 9DP DT FD	DRB24M X 9DP SG	DRB24M X 9DP SG
FD271212	1	DDF27M	DDF27D	DRB27M X 9DP DT FD	DRB27M X 9DP SG	DRB27M X 9DP SG
FD301212	1	DDF30M	DDF30D	DRB30M X 9DP DT FD	DRB30M X 9DP SG	DRB30M X 9DP SG
FD331212	1	DDF33M	DDF33D	DRB33M X 9DP DT FD	DRB33M X 9DP SG	DRB33M X 9DP SG
FD361212	1	DDF36M	DDF36D	DRB36M X 9DP DT FD	DRB36M X 9DP SG	DRB36M X 9DP SG
FURNITURE DRAWERS ▪ 24" DEEP ▪ 12" HIGH						
FD122412	1	DDF12M	DDF12D	DRB12M X 21DP DT FD	DRB12M X 21DP SG	DRB12M X 18DP SG
FD152412	1	DDF15M	DDF15D	DRB15M X 21DP DT FD	DRB15M X 21DP SG	DRB15M X 18DP SG
FD182412	1	DDF18M	DDF18D	DRB18M X 21DP DT FD	DRB18M X 21DP SG	DRB18M X 18DP SG
FD212412	1	DDF21M	DDF21D	DRB21M X 21DP DT FD	DRB21M X 21DP SG	DRB21M X 18DP SG
FD242412	1	DDF24M	DDF24D	DRB24M X 21DP DT FD	DRB24M X 21DP SG	DRB24M X 18DP SG
FD272412	1	DDF27M	DDF27D	DRB27M X 21DP DT FD	DRB27M X 21DP SG	DRB27M X 18DP SG
FD302412	1	DDF30M	DDF30D	DRB30M X 21DP DT FD	DRB30M X 21DP SG	DRB30M X 18DP SG
FD332412	1	DDF33M	DDF33D	DRB33M X 21DP DT FD	DRB33M X 21DP SG	DRB33M X 18DP SG
FD362412	1	DDF36M	DDF36D	DRB36M X 21DP DT FD	DRB36M X 21DP SG	DRB36M X 18DP SG
PEDESTAL DRAWERS						
PD1217 1DWR	1	DDF12M	DDF12D	DRB12M X 21DP DT FD	DRB12M X 21DP SG	DRB12M X 18DP SG
PD1517 1DWR	1	DDF15M	DDF15D	DRB15M X 21DP DT FD	DRB15M X 21DP SG	DRB15M X 18DP SG
PD1817 1DWR	1	DDF18M	DDF18D	DRB18M X 21DP DT FD	DRB18M X 21DP SG	DRB18M X 18DP SG
PD2117 1DWR	1	DDF21M	DDF21D	DRB21M X 21DP DT FD	DRB21M X 21DP SG	DRB21M X 18DP SG
PD2417 1DWR	1	DDF24M	DDF24D	DRB24M X 21DP DT FD	DRB24M X 21DP SG	DRB24M X 18DP SG
PD2717 1DWR	1	DDF27M	DDF27D	DRB27M X 21DP DT FD	DRB27M X 21DP SG	DRB27M X 18DP SG
PD3017 1DWR	1	DDF30M	DDF30D	DRB30M X 21DP DT FD	DRB30M X 21DP SG	DRB30M X 18DP SG
PD3317 1DWR	1	DDF33M	DDF33D	DRB33M X 21DP DT FD	DRB33M X 21DP SG	DRB33M X 18DP SG
PD3617 1DWR	1	DDF36M	DDF36D	DRB36M X 21DP DT FD	DRB36M X 21DP SG	DRB36M X 18DP SG

SKU	Qty	DRAWER / PANEL FRONT Full Overlay Part Name	DRAWER / PANEL FRONT Standard Overlay Part Name	DRAWER BODY PORTFOLIO SELECT Part Name	Qty	DRAWER BODY PORTFOLIO Part Name	Qty	DRAWER BODY VALUE BUILT Part Name
TWO DRAWER BASE								
DB21 2DWR	2	DDF21 2DB	DDF21 2DB	DRB21 HD X 21DPDTFD	2	DRB21 HD X 21DPDTFD	-	N/A
DB24 2DWR	2	DDF24 2DB	DDF24 2DB	DRB24 HD X 21DPDTFD	2	DRB24 HD X 21DPDTFD	-	N/A
DB27 2DWR	2	DDF27 2DB	DDF27 2DB	DRB27 HD X 21DPDTFD	2	DRB27 HD X 21DPDTFD	-	N/A
DB30 2DWR	2	DDF30 2DB	DDF30 2DB	DRB30 HD X 21DPDTFD	2	DRB30 HD X 21DPDTFD	-	N/A
DB33 2DWR	2	DDF33 2DB	DDF33 2DB	DRB33 HD X 21DPDTFD	2	DRB33 HD X 21DPDTFD	-	N/A
DB36 2DWR	2	DDF36 2DB	DDF36 2DB	DRB36 HD X 21DPDTFD	2	DRB36 HD X 21DPDTFD	-	N/A
TWO DRAWER BASE WITH PEG DISH ORGANIZER								
DB21 2DWR PDO	2	DDF21 2DB	DDF21 2DB	DRB21 HD X 21DPDTFD	2	DRB21 HD X 21DPDTFD	-	N/A
DB24 2DWR PDO	2	DDF24 2DB	DDF24 2DB	DRB24 HD X 21DPDTFD	2	DRB24 HD X 21DPDTFD	-	N/A
DB27 2DWR PDO	2	DDF27 2DB	DDF27 2DB	DRB27 HD X 21DPDTFD	2	DRB27 HD X 21DPDTFD	-	N/A
DB30 2DWR PDO	2	DDF30 2DB	DDF30 2DB	DRB30 HD X 21DPDTFD	2	DRB30 HD X 21DPDTFD	-	N/A
DB33 2DWR PDO	2	DDF33 2DB	DDF33 2DB	DRB33 HD X 21DPDTFD	2	DRB33 HD X 21DPDTFD	-	N/A
DB36 2DWR PDO	2	DDF36 2DB	DDF36 2DB	DRB36 HD X 21DPDTFD	2	DRB36 HD X 21DPDTFD	-	N/A
TWO DRAWER BASE WITH DEEP SLIDING SHELF								
DB21 2DWR SFWT	2	DDF21 2DB	DDF21 2DB	DRB21 HD X 21DPDTFD SDROT21	2	DRB21 HD X 21DPDTFD SDROT21	-	N/A
DB24 2DWR SFWT	2	DDF24 2DB	DDF24 2DB	DRB24 HD X 21DPDTFD SDROT24	2	DRB24 HD X 21DPDTFD SDROT24	-	N/A
DB27 2DWR SFWT	2	DDF27 2DB	DDF27 2DB	DRB27 HD X 21DPDTFD SDROT27	2	DRB27 HD X 21DPDTFD SDROT27	-	N/A
DB30 2DWR SFWT	2	DDF30 2DB	DDF30 2DB	DRB30 HD X 21DPDTFD SDROT30	2	DRB30 HD X 21DPDTFD SDROT30	-	N/A
DB33 2DWR SFWT	2	DDF33 2DB	DDF33 2DB	DRB33 HD X 21DPDTFD SDROT33	2	DRB33 HD X 21DPDTFD SDROT33	-	N/A
DB36 2DWR SFWT	2	DDF36 2DB	DDF36 2DB	DRB36 HD X 21DPDTFD SDROT36	2	DRB36 HD X 21DPDTFD SDROT36	-	N/A
TWO DRAWER BASE WITH SCALLOPED DEEP SLIDING SHELF & PEG DISH ORGANIZER								
DB21 2DWR SFWT PDO	2	DDF21 2DB	DDF21 2DB	DRB21 HD X 21DPDTFD SDROT21	2	DRB21 HD X 21DPDTFD SDROT21	-	N/A
DB24 2DWR SFWT PDO	2	DDF24 2DB	DDF24 2DB	DRB24 HD X 21DPDTFD SDROT24	2	DRB24 HD X 21DPDTFD SDROT24	-	N/A
DB27 2DWR SFWT PDO	2	DDF27 2DB	DDF27 2DB	DRB27 HD X 21DPDTFD SDROT27	2	DRB27 HD X 21DPDTFD SDROT27	-	N/A
DB30 2DWR SFWT PDO	2	DDF30 2DB	DDF30 2DB	DRB30 HD X 21DPDTFD SDROT30	2	DRB30 HD X 21DPDTFD SDROT30	-	N/A
DB33 2DWR SFWT PDO	2	DDF33 2DB	DDF33 2DB	DRB33 HD X 21DPDTFD SDROT33	2	DRB33 HD X 21DPDTFD SDROT33	-	N/A
DB36 2DWR SFWT PDO	2	DDF36 2DB	DDF36 2DB	DRB36 HD X 21DPDTFD SDROT36	2	DRB36 HD X 21DPDTFD SDROT36	-	N/A

SKU	Qty	DRAWER / PANEL FRONT Full Overlay Part Name	DRAWER / PANEL FRONT Standard Overlay Part Name	DRAWER BODY PORTFOLIO SELECT Part Name	Qty	DRAWER BODY PORTFOLIO Part Name	Qty	DRAWER BODY VALUE BUILT Part Name
THREE DRAWER BASE								
DB12	1 2	DDF12 DDF12M	DDF12 DDF12D	DRB12 X 21DP DT FD DRB12M X 21DP DT FD	1 2	DRB12 X 21DP SG DRB12M X 21DP SG	1 2	DRB12 X 18DP SG DRB12M X 18DP SG
DB15	1 2	DDF15 DDF15M	DDF15 DDF15D	DRB15 X 21DP DT FD DRB15M X 21DP DT FD	1 2	DRB15 X 21DP SG DRB15M X 21DP SG	1 2	DRB15 X 18DP SG DRB15M X 18DP SG
DB18	1 2	DDF18 DDF18M	DDF18 DDF18D	DRB18 X 21DP DT FD DRB18M X 21DP DT FD	1 2	DRB18 X 21DP SG DRB18M X 21DP SG	1 2	DRB18 X 18DP SG DRB18M X 18DP SG
DB21	1 2	DDF21 DDF21M	DDF21 DDF21D	DRB21 X 21DP DT FD DRB21M X 21DP DT FD	1 2	DRB21 X 21DP SG DRB21M X 21DP SG	1 2	DRB21 X 18DP SG DRB21M X 18DP SG
DB24	1 2	DDF24 DDF24M	DDF24 DDF24D	DRB24 X 21DP DT FD DRB24M X 21DP DT FD	1 2	DRB24 X 21DP SG DRB24M X 21DP SG	1 2	DRB24 X 18DP SG DRB24M X 18DP SG
DB27	1 2	DDF27 DDF27M	DDF27 DDF27D	DRB27 X 21DP DT FD DRB27M X 21DP DT FD	1 2	DRB27 X 21DP SG DRB27M X 21DP SG	1 2	DRB27 X 18DP SG DRB27M X 18DP SG
DB30	1 2	DDF30 DDF30M	DDF30 DDF30D	DRB30 X 21DP DT FD DRB30M X 21DP DT FD	1 2	DRB30 X 21DP SG DRB30M X 21DP SG	1 2	DRB30 X 18DP SG DRB30M X 18DP SG
DB33	1 2	DDF33 DDF33M	DDF33 DDF33D	DRB33 X 21DP DT FD DRB33M X 21DP DT FD	1 2	DRB33 X 21DP SG DRB33M X 21DP SG	1 2	DRB33 X 18DP SG DRB33M X 18DP SG
DB36 1TD	1 2	DDF36 DDF36M	DDF36 DDF36D	DRB36 X 21DP DT FD DRB36M X 21DP DT FD	1 2	DRB36 X 21DP SG DRB36M X 21DP SG	1 2	DRB36 X 18DP SG DRB36M X 18DP SG
THREE DRAWER BASE WITH FACTORY INSTALLED WOOD TIERED CUTLERY DIVIDER								
DB15 WTCD	1 2	DDF15 DDF15M	DDF15 DDF15D	WTCDKFD15 DRB15M X 21DP DT FD	1 2	WTCDKFD15 DRB24M X 21DP SG	-	N/A
DB18 WTCD	1 2	DDF18 DDF18M	DDF18 DDF18D	WTCDKFD18 DRB18M X 21DP DT FD	1 2	WTCDKFD18 DRB24M X 21DP SG	-	N/A
DB21 WTCD	1 2	DDF21 DDF21M	DDF21 DDF21D	WTCDKFD21 DRB21M X 21DP DT FD	1 2	WTCDKFD21 DRB24M X 21DP SG	-	N/A
DB24 WTCD	1 2	DDF24 DDF24M	DDF24 DDF24D	WTCDKFD24 DRB24M X 21DP DT FD	1 2	WTCDKFD24 DRB24M X 21DP SG	-	N/A
DB30 WTCD	1 2	DDF30 DDF30M	DDF30 DDF30D	WTCDKFD30 DRB30M X 21DP DT FD	1 2	WTCDKFD30 DRB30M X 21DP SG	-	N/A
DB36 1TD WTCD	1 2	DDF36 DDF36M	DDF36 DDF36D	WTCDKFD36 DRB36M X 21DP DT FD	1 2	WTCDKFD36 DRB36M X 21DP SG	-	N/A
THREE DRAWER BASE WITH FACTORY INSTALLED CUTLERY DIVIDER								
DB15 CD	1 2	DDF15 DDF15M	DDF15 DDF15D	DRB15 X 21DP DT FD DRB15M X 21DP DT FD	1 2	DRB15 X 21DP DT FD DRB15M X 21DP SG	-	N/A
DB18 CD	1 2	DDF18 DDF18M	DDF18 DDF18D	DRB18 X 21DP DT FD DRB18M X 21DP DT FD	1 2	DRB18 X 21DP DT FD DRB18M X 21DP SG	-	N/A
DB21 CD	1 2	DDF21 DDF21M	DDF21 DDF21D	DRB21 X 21DP DT FD DRB21M X 21DP DT FD	1 2	DRB21 X 21DP DT FD DRB21M X 21DP SG	-	N/A
DB24 CD	1 2	DDF24 DDF24M	DDF24 DDF24D	DRB24 X 21DP DT FD DRB24M X 21DP DT FD	1 2	DRB24 X 21DP DT FD DRB24M X 21DP SG	-	N/A
DB30 CD	1 2	DDF30 DDF30M	DDF30 DDF30D	DRB30 X 21DP DT FD DRB30M X 21DP DT FD	1 2	DRB30 X 21DP DT FD DRB30M X 21DP SG	-	N/A
DB36 1TD CD	1 2	DDF36 DDF36M	DDF36 DDF36D	DRB36 X 21DP DT FD DRB36M X 21DP DT FD	1 2	DRB36 X 21DP DT FD DRB36M X 21DP SG	-	N/A
THREE DRAWER BASE WITH FACTORY INSTALLED SPICE DRAWER								
DB15 SDI	1 2	DDF15 DDF15M	DDF15 DDF15D	DRB15 X 21DP DT FD DRB15M X 21DP DT FD	1 2	DRB15 X 21DP DT FD DRB15M X 21DP SG	-	N/A
DB18 SDI	1 2	DDF18 DDF18M	DDF18 DDF18D	DRB18 X 21DP DT FD DRB18M X 21DP DT FD	1 2	DRB18 X 21DP DT FD DRB18M X 21DP SG	-	N/A
DB21 SDI	1 2	DDF21 DDF21M	DDF21 DDF21D	DRB21 X 21DP DT FD DRB21M X 21DP DT FD	1 2	DRB21 X 21DP DT FD DRB21M X 21DP SG	-	N/A
DB24 SDI	1 2	DDF24 DDF24M	DDF24 DDF24D	DRB24 X 21DP DT FD DRB24M X 21DP DT FD	1 2	DRB24 X 21DP DT FD DRB24M X 21DP SG	-	N/A

SKU	Qty	DRAWER / PANEL FRONT Full Overlay Part Name	DRAWER / PANEL FRONT Standard Overlay Part Name	DRAWER BODY PORTFOLIO SELECT Part Name	Qty	DRAWER BODY PORTFOLIO Part Name	Qty	DRAWER BODY VALUE BUILT Part Name
FOUR DRAWER BASE								
DB12 4DWR	3 1	DDF12 DDF12M	DDF12 DDF12D	DRB12 X 21DP DT FD DRB12M X 21DP DT FD	3 1	DRB12 X 21DP SG DRB12M X 21DP SG	3 1	DRB12 X 18DP SG DRB12M X 18DP SG
DB15 4DWR	3 1	DDF15 DDF15M	DDF15 DDF15D	DRB15 X 21DP DT FD DRB15M X 21DP DT FD	3 1	DRB15 X 21DP SG DRB15M X 21DP SG	3 1	DRB15 X 18DP SG DRB15M X 18DP SG
DB18 4DWR	3 1	DDF18 DDF18M	DDF18 DDF18D	DRB18 X 21DP DT FD DRB18M X 21DP DT FD	3 1	DRB18 X 21DP SG DRB18M X 21DP SG	3 1	DRB18 X 18DP SG DRB18M X 18DP SG
DB21 4DWR	3 1	DDF21 DDF21M	DDF21 DDF21D	DRB21 X 21DP DT FD DRB21M X 21DP DT FD	3 1	DRB21 X 21DP SG DRB21M X 21DP SG	3 1	DRB21 X 18DP SG DRB21M X 18DP SG
DB24 4DWR	3 1	DDF24 DDF24M	DDF24 DDF24D	DRB24 X 21DP DT FD DRB24M X 21DP DT FD	3 1	DRB24 X 21DP SG DRB24M X 21DP SG	3 1	DRB24 X 18DP SG DRB24M X 18DP SG
FOUR DRAWER BASE WITH FACTORY INSTALLED WOOD TIERED CUTLERY DIVIDER								
DB15 4DWR WTCD	1 2 1	DDF15 DDF15 DDF15M	DDF15 DDF15 DDF15D	WTCDKFD15 DRB15 X 21DP DT FD DRB15M X 21DP DT FD	1 2 1	WTCDKFD15 DRB15 X 21DP SG DRB15M X 21DP SG	1 2 1	WTCDKFD15 DRB15 X 18DP SG DRB15M X 18DP SG
DB18 4DWR WTCD	1 2 1	DDF18 DDF18 DDF18M	DDF18 DDF18 DDF18D	WTCDKFD18 DRB18 X 21DP DT FD DRB18M X 21DP DT FD	1 2 1	WTCDKFD18 DRB18 X 21DP SG DRB18M X 21DP SG	1 2 1	WTCDKFD18 DRB18 X 18DP SG DRB18M X 18DP SG
DB21 4DWR WTCD	1 2 1	DDF21 DDF21 DDF21M	DDF21 DDF21 DDF21D	WTCDKFD21 DRB21 X 21DP DT FD DRB21M X 21DP DT FD	1 2 1	WTCDKFD21 DRB21 X 21DP SG DRB21M X 21DP SG	1 2 1	WTCDKFD21 DRB21 X 18DP SG DRB21M X 18DP SG
DB24 4DWR WTCD	1 2 1	DDF24 DDF24 DDF24M	DDF24 DDF24 DDF24D	WTCDKFD24 DRB24 X 21DP DT FD DRB24M X 21DP DT FD	1 2 1	WTCDKFD24 DRB24 X 21DP SG DRB24M X 21DP SG	1 2 1	WTCDKFD24 DRB24 X 18DP SG DRB24M X 18DP SG
FOUR DRAWER BASE WITH FACTORY INSTALLED CUTLERY DIVIDER								
DB15 4DWR CD	3 1	DDF15 DDF15M	DDF15 DDF15D	DRB15 X 21DP DT FD DRB15M X 21DP DT FD	1 2 1	DRB15 X 21DP DT FD DRB15 X 21DP SG DRB15M X 21DP SG	3 1	DRB15 X 18DP SG DRB15M X 18DP SG
DB18 4DWR CD	3 1	DDF18 DDF18M	DDF18 DDF18D	DRB18 X 21DP DT FD DRB18M X 21DP DT FD	1 2 1	DRB18 X 21DP DT FD DRB18 X 21DP SG DRB18M X 21DP SG	3 1	DRB18 X 18DP SG DRB18M X 18DP SG
DB21 4DWR CD	3 1	DDF21 DDF21M	DDF21 DDF21D	DRB21 X 21DP DT FD DRB21M X 21DP DT FD	1 2 1	DRB21 X 21DP DT FD DRB21 X 21DP SG DRB21M X 21DP SG	3 1	DRB21 X 18DP SG DRB21M X 18DP SG
DB24 4DWR CD	3 1	DDF24 DDF24M	DDF24 DDF24D	DRB24 X 21DP DT FD DRB24M X 21DP DT FD	1 2 1	DRB24 X 21DP DT FD DRB24 X 21DP SG DRB24M X 21DP SG	3 1	DRB24 X 18DP SG DRB24M X 18DP SG
FOUR DRAWER BASE WITH FACTORY INSTALLED SPICE DRAWER INSERT								
DB15 4DWR SDI	3 1	DDF15 DDF15M	DDF15 DDF15D	DRB15 X 21DP DT FD DRB15M X 21DP DT FD	1 2 1	DRB15 X 21DP DT FD DRB15 X 21DP SG DRB15M X 21DP SG	3 1	DRB15 X 18DP SG DRB15M X 18DP SG
DB18 4DWR SDI	3 1	DDF18 DDF18M	DDF18 DDF18D	DRB18 X 21DP DT FD DRB18M X 21DP DT FD	1 2 1	DRB18 X 21DP DT FD DRB18 X 21DP SG DRB18M X 21DP SG	3 1	DRB18 X 18DP SG DRB18M X 18DP SG
DB21 4DWR SDI	3 1	DDF21 DDF21M	DDF21 DDF21D	DRB21 X 21DP DT FD DRB21M X 21DP DT FD	1 2 1	DRB21 X 21DP DT FD DRB21 X 21DP SG DRB21M X 21DP SG	3 1	DRB21 X 18DP SG DRB21M X 18DP SG
DB24 4DWR SDI	3 1	DDF24 DDF24M	DDF24 DDF24D	DRB24 X 21DP DT FD DRB24M X 21DP DT FD	1 2 1	DRB24 X 21DP DT FD DRB24 X 21DP SG DRB24M X 21DP SG	3 1	DRB24 X 18DP SG DRB24M X 18DP SG
BASE MICROWAVE CABINET								
BMC24	2	DDF24	DDF24	DRB24 X 21DP DT FD	2	DRB24 X 21DP SG	2	DRB24 X 18DP SG
BMC27	2	DDF27	DDF27	DRB27 X 21DP DT FD	2	DRB27 X 21DP SG	2	DRB27 X 18DP SG
BMC30	2	DDF30	DDF30	DRB30 X 21DP DT FD	2	DRB30 X 21DP SG	2	DRB30 X 18DP SG
BUILT-IN BASE MICROWAVE CABINET								
BBMC24	1	DDF24	DDF24	DRB21 X 21DP DT FD	1	DRB21 X 21DP SG	1	DRB21 X 18DP SG
BBMC27	1	DDF27	DDF27	DRB24 X 21DP DT FD	1	DRB24 X 21DP SG	1	DRB24 X 18DP SG
BBMC30	1	DDF30	DDF30	DRB27 X 21DP DT FD	1	DRB27 X 21DP SG	1	DRB27 X 18DP SG
BASE SPICE DRAWER CABINET								
BSDC6	5	DDF SDC	DDF SDC	DRB6 BSDC6	5	DRB6 BSDC6	5	DRB6 BSDC6
WALL SPICE DRAWER CABINET								
SDC18	3	DDF SDC	DDF SDC	DRB6 SDC30	3	DRB6 SDC30	3	DRB6 SDC30
SDC24	4	DDF SDC	DDF SDC	DRB6 SDC30	4	DRB6 SDC30	4	DRB6 SDC30
SDC30	5	DDF SDC	DDF SDC	DRB6 SDC30	5	DRB6 SDC30	5	DRB6 SDC30
SDC36	6	DDF SDC	DDF SDC	DRB6 SDC30	6	DRB6 SDC30	6	DRB6 SDC30

SKU	Qty	DOOR Part Name	Qty	PANEL Part Name
CORNER SINK BASE				
CSB36	1	DR1524	1	DDF15
CORNER SINK FRONT				
CSF36	1	DR1524	1	DDF15
CSF42	1	DR2424	1	DDF24
DEEP SINK/RANGE BASE				
DSB30 BUTT	2	DR1521 BUTT	-	N/A
DSB33 BUTT	2	DR1621 BUTT	-	N/A
DSB36 BUTT	2	DR1821 BUTT	-	N/A
DSB39	2	DR1921	-	N/A
SINK BASE MULTI-STORAGE				
SBMSC30 BUTT STO	2	DR1524 BUTT	1	DDF30 DRILL
SBMSC36 BUTT STO	2	DR1824 BUTT	1	DDF36 DRILL
SINK/COOKTOP BASE AND FRONT				
SF12	1	DR1224	1	DDF12
SF15	1	DR1524	1	DDF15
SB18 / SF18	1	DR1824	1	DDF18
SB21 / SF21	1	DR2124	1	DDF21
SB24 / SF24	1	DR2424	1	DDF24
SB24 BUTT / SF24 BUTT	2	DR1224 BUTT	1	DDF24
SB27 BUTT / SF27 BUTT	2	DR1324 BUTT	1	DDF27
SB30 BUTT / SF30 BUTT	2	DR1524 BUTT	1	DDF30
SB33 BUTT / SF33 BUTT	2	DR1624 BUTT	1	DDF33
SB36 BUTT / SF36 BUTT	2	DR1824 BUTT	1	DDF36
SB39 / SF39	2	DR1924	2	DDF19
SB42 / SF42	2	DR2124	2	DDF21
SB45 / SF45	3	DR1524	3	DDF15
SB48 / SF48	2	DR2424	2	DDF24
SINK BASE WITH FACTORY INSTALLED TILT-OUT TRAY(S)				
SB21 STO	1	DR2124	1	DDF21 DRILL
SB24 STO	1	DR2424	1	DDF24 DRILL
SB24 BUTT STO	2	DR1224 BUTT	1	DDF24 DRILL
SB27 BUTT STO	2	DR1324 BUTT	1	DDF27 DRILL
SB30 BUTT STO	2	DR1524 BUTT	1	DDF30 DRILL
SB33 BUTT STO	2	DR1624 BUTT	1	DDF33 DRILL
SB36 BUTT STO	2	DR1824 BUTT	1	DDF36 DRILL
SB39 STO	2	DR1924	2	DDF19 DRILL
SB42 STO	2	DR2124	2	DDF21 DRILL
SB48 STO	2	DR2424	2	DDF24 DRILL
BASE PLUMBING SKIRT				
BPS30 UD	-	N/A	1	DDFKDC33/27
BPS36 UD	-	N/A	1	DDFKDC36/33
BPS3034 UD	-	N/A	1	DDFKDC33/27
BPS3634 UD	-	N/A	1	DDFKDC36/33
ADAPTABLE SINK BASE KIT				
ASB3032 KIT	2	DR1521 BUTT	-	N/A
ASB3632 KIT	2	DR1821 BUTT	-	N/A
ASB3034 KIT	2	DR1524 BUTT	-	N/A
ASB3634 KIT	2	DR1824 BUTT	-	N/A

SKU	DOOR Qty	DOOR Part Name	SPIN UNIT Qty	SPIN UNIT Part Name
CORNER BASE				
BER33 (L/R)	1 1	DR930 BER DRILL DR930 BER ND	-	N/A
BER3336L	1 1	DR930 BER DRILL DR1230 BER ND	-	N/A
BER3336R	1 1	DR930 BER ND DR1230 BER DRILL	-	N/A
BER36 (L/R)	1 1	DR1230 BER DRILL DR1230 BER ND	-	N/A
BER3633L	1 1	DR1230 BER DRILL DR930 BER ND	-	N/A
BER3633R	1 1	DR1230 BER ND DR930 BER DRILL	-	N/A
BSS33 (L/R)	1 1	DR930 BER DRILL DR930 BER ND	1	BSS33 UNIT RAS
BSS33 (L/R) WD	1 1	DR930 BER DRILL DR930 BER ND	2	BSS33 SHELF WD NP
BSS3336L	1 1	DR930 BER DRILL DR1230 BER ND	1	BSS33 UNIT RAS
BSS3336L WD	1 1	DR930 BER DRILL DR1230 BER ND	2	BSS3336 SHELF WD NP
BSS3336R	1 1	DR930 BER ND DR1230 BER DRILL	1	BSS33 UNIT RAS
BSS3336R WD	1 1	DR930 BER ND DR1230 BER DRILL	2	BSS3336 SHELF WD NP
BSS36 (L/R)	1 1	DR1230 BER DRILL DR1230 BER ND	1	BSS36 UNIT RAS
BSS36 (L/R) WD	1 1	DR1230 BER DRILL DR1230 BER ND	2	BSS36 SHELF WD NP
BSS3633L	1 1	DR1230 BER DRILL DR930 BER ND	1	BSS33 UNIT RAS
BSS3633L WD	1 1	DR1230 BER DRILL DR930 BER ND	2	BSS3633 SHELF WD NP
BSS3633R	1 1	DR1230 BER ND DR930 BER DRILL	1	BSS33 UNIT RAS
BSS3633R WD	1 1	DR1230 BER ND DR930 BER DRILL	2	BSS3633 SHELF WD NP
CAR36 (L/R)	1 1	DR1230 BER DRILL DR1230 BER ND	1	CAR36 UNIT RAS
CAR36 (L/R) WD	1 1	DR1230 BER DRILL DR1230 BER ND	2 1 1	CAR36 SHELF WD BSSCWSCAR T-SHAFT RA WOOD SPIN SHELF HDW
CBS36	1	DRCBS36	1	CBS36 UNIT RAS
CBS36 WD	1	DRCBS36	2	CBS SHELF WD NP

SKU	Qty	DOOR Part Name	SPECIALTY DOOR Part Name	GLASS INSERT Part Name	Qty	ADJUSTABLE SHELF *For All Plywood Construction and/or Matching Interior Adjustable Shelf, refer to Parts Directory legend *Part Name
UTILITY WITH ADJUSTABLE SHELVES • 12" DEEP X 84" HIGH						
UT1212 X 84 AS	1 1	DR1230 DR1250	DR1230 SD	DGI-1230	5	S1212
UT1512 X 84 AS	1 1	DR1530 DR1550	DR1530 SD	DGI-1530	5	S1512
UT1812 X 84 AS	1 1	DR1830 DR1850	DR1830 SD	DGI-1830	5	S1812
UT2112 X 84 AS	1 1	DR2130 DR2150	DR2130 SD	DGI-2130	5	S2112
UT2412 X 84 AS BUTT	2 2	DR1230 BUTT DR1250 BUTT	DR1230 BUTT SD	DGI-1230 BUTT	5	S2412
UTILITY WITH ADJUSTABLE SHELVES • 12" DEEP X 90" HIGH						
UT1212 X 90 AS	1 1	DR1236 DR1250	DR1236 SD	DGI-1236	6	S1212
UT1512 X 90 AS	1 1	DR1536 DR1550	DR1536 SD	DGI-1536	6	S1512
UT1812 X 90 AS	1 1	DR1836 DR1850	DR1836 SD	DGI-1836	6	S1812
UT2112 X 90 AS	1 1	DR2136 DR2150	DR2136 SD	DGI-2136	6	S2112
UT2412 X 90 AS BUTT	2 2	DR1236 BUTT DR1250 BUTT	DR1236 BUTT SD	DGI-1236 BUTT	6	S2412
UTILITY WITH ADJUSTABLE SHELVES • 12" DEEP X 93" HIGH						
UT1212 X 93 AS	1 1	DR1239 DR1250	DR1239 SD	DGI-1239	7	S1212
UT1512 X 93 AS	1 1	DR1539 DR1550	DR1539 SD	DGI-1539	7	S1512
UT1812 X 93 AS	1 1	DR1839 DR1850	DR1839 SD	DGI-1839	7	S1812
UT2112 X 93 AS	1 1	DR2139 DR2150	DR2139 SD	DGI-2139	7	S2112
UT2412 X 93 AS BUTT	2 2	DR1239 BUTT DR1250 BUTT	DR1239 BUTT SD	DGI-1239 BUTT	7	S2412
UTILITY WITH ADJUSTABLE SHELVES • 12" DEEP X 96" HIGH						
UT1212 X 96 AS	1 1	DR1242 DR1250	DR1242 SD	DGI-1242	7	S1212
UT1512 X 96 AS	1 1	DR1542 DR1550	DR1542 SD	DGI-1542	7	S1512
UT1812 X 96 AS	1 1	DR1842 DR1850	DR1842 SD	DGI-1842	7	S1812
UT2112 X 96 AS	1 1	DR2142 DR2150	DR2142 SD	DGI-2142	7	S2112
UT2412 X 96 AS BUTT	2 2	DR1242 BUTT DR1250 BUTT	DR1242 BUTT SD	DGI-1242 BUTT	7	S2412
UTILITY WITH ADJUSTABLE SHELVES • 24" DEEP X 84" HIGH						
UT1224 X 84 AS	1 1	DR1230 DR1250	DR1230 SD	DGI-1230	5	S1224
UT1524 X 84 AS	1 1	DR1530 DR1550	DR1530 SD	DGI-1530	5	S1524
UT1824 X 84 AS	1 1	DR1830 DR1850	DR1830 SD	DGI-1830	5	S1824
UT2124 X 84 AS	1 1	DR2130 DR2150	DR2130 SD	DGI-2130	5	S2124
UT2424 X 84 AS BUTT	2 2	DR1230 BUTT DR1250 BUTT	DR1230 BUTT SD	DGI-1230 BUTT	5	S2424
UT2724 X 84 AS BUTT	2 2	DR1330 BUTT DR1350 BUTT	DR1330 BUTT SD	DGI-1330 BUTT	5	S2724
UT3024 X 84 AS BUTT	2 2	DR1530 BUTT DR1550 BUTT	DR1530 BUTT SD	DGI-1530 BUTT	5	S3024
UT3324 X 84 AS BUTT	2 2	DR1630 BUTT DR1650 BUTT	DR1630 BUTT SD	DGI-1630 BUTT	5	S3324
UT3624 X 84 AS BUTT	2 2	DR1830 BUTT DR1850 BUTT	DR1830 BUTT SD	DGI-1830 BUTT	5	S3624

SKU	Qty	DOOR Part Name	SPECIALTY DOOR Part Name	GLASS INSERT Part Name	Qty	ADJUSTABLE SHELF *For All Plywood Construction and/or Matching Interior Adjustable Shelf, refer to Parts Directory legend *Part Name
UTILITY WITH ADJUSTABLE SHELVES • 24" DEEP X 90" HIGH						
UT1224 X 90 AS	1 1	DR1236 DR1250	DR1236 SD	DGI-1236	6	S1224
UT1524 X 90 AS	1 1	DR1536 DR1550	DR1536 SD	DGI-1536	6	S1524
UT1824 X 90 AS	1 1	DR1836 DR1850	DR1836 SD	DGI-1836	6	S1824
UT2124 X 90 AS	1 1	DR2136 DR2150	DR2136 SD	DGI-2136	6	S2124
UT2424 X 90 AS BUTT	2 2	DR1236 BUTT DR1250 BUTT	DR1236 BUTT SD	DGI-1236 BUTT	6	S2424
UT2724 X 90 AS BUTT	2 2	DR1336 BUTT DR1350 BUTT	DR1336 BUTT SD	DGI-1336 BUTT	6	S2724
UT3024 X 90 AS BUTT	2 2	DR1536 BUTT DR1550 BUTT	DR1536 BUTT SD	DGI-1536 BUTT	6	S3024
UT3324 X 90 AS BUTT	2 2	DR1636 BUTT DR1650 BUTT	DR1636 BUTT SD	DGI-1636 BUTT	6	S3324
UT3624 X 90 AS BUTT	2 2	DR1836 BUTT DR1850 BUTT	DR1836 BUTT SD	DGI-1836 BUTT	6	S3624
UTILITY WITH ADJUSTABLE SHELVES • 24" DEEP X 93" HIGH						
UT1224 X 93 AS	1 1	DR1239 DR1250	DR1239 SD	DGI-1239	7	S1224
UT1524 X 93 AS	1 1	DR1539 DR1550	DR1539 SD	DGI-1539	7	S1524
UT1824 X 93 AS	1 1	DR1839 DR1850	DR1839 SD	DGI-1839	7	S1824
UT2124 X 93 AS	1 1	DR2139 DR2150	DR2139 SD	DGI-2139	7	S2124
UT2424 X 93 AS BUTT	2 2	DR1239 BUTT DR1250 BUTT	DR1239 BUTT SD	DGI-1239 BUTT	7	S2424
UT2724 X 93 AS BUTT	2 2	DR1339 BUTT DR1350 BUTT	DR1339 BUTT SD	DGI-1339 BUTT	7	S2724
UT3024 X 93 AS BUTT	2 2	DR1539 BUTT DR1550 BUTT	DR1539 BUTT SD	DGI-1539 BUTT	7	S3024
UT3324 X 93 AS BUTT	2 2	DR1639 BUTT DR1650 BUTT	DR1639 BUTT SD	DGI-1639 BUTT	7	S3324
UT3624 X 93 AS BUTT	2 2	DR1839 BUTT DR1850 BUTT	DR1839 BUTT SD	DGI-1839 BUTT	7	S3624
UTILITY WITH ADJUSTABLE SHELVES • 24" DEEP X 96" HIGH						
UT1224 X 96 AS	1 1	DR1242 DR1250	DR1242 SD	DGI-1242	7	S1224
UT1524 X 96 AS	1 1	DR1542 DR1550	DR1542 SD	DGI-1542	7	S1524
UT1824 X 96 AS	1 1	DR1842 DR1850	DR1842 SD	DGI-1842	7	S1824
UT2124 X 96 AS	1 1	DR2142 DR2150	DR2142 SD	DGI-2142	7	S2124
UT2424 X 96 AS BUTT	2 2	DR1242 BUTT DR1250 BUTT	DR1242 BUTT SD	DGI-1242 BUTT	7	S2424
UT2724 X 96 AS BUTT	2 2	DR1342 BUTT DR1350 BUTT	DR1342 BUTT SD	DGI-1342 BUTT	7	S2724
UT3024 X 96 AS BUTT	2 2	DR1542 BUTT DR1550 BUTT	DR1542 BUTT SD	DGI-1542 BUTT	7	S3024
UT3324 X 96 AS BUTT	2 2	DR1642 BUTT DR1650 BUTT	DR1642 BUTT SD	DGI-1642 BUTT	7	S3324
UT3624 X 96 AS BUTT	2 2	DR1842 BUTT DR1850 BUTT	DR1842 BUTT SD	DGI-1842 BUTT	7	S3624

SKU	Qty	DOOR Part Name	SPECIALTY DOOR Part Name	GLASS INSERT Part Name	Qty	ADJUSTABLE SHELF *For All Plywood Construction and/or Matching Interior Adjustable Shelf, refer to Parts Directory legend *Part Name
UTILITY WITH SLIDING SHELVES • 84" HIGH						
UT1224 X 84 4SSK	1 1	DR1230 DR1250	DR1230 SD	DGI-1230	1 4	S1224 SSK12
UT1524 X 84 4SSK	1 1	DR1530 DR1550	DR1530 SD	DGI-1530	1 4	S1524 SSK15
UT1824 X 84 4SSK	1 1	DR1830 DR1850	DR1830 SD	DGI-1830	1 4	S1824 SSK18
UT2124 X 84 4SSK	1 1	DR2130 DR2150	DR2130 SD	DGI-2130	1 4	S2124 SSK21
UT2424 X 84 4SSK BUTT	2 2	DR1230 BUTT DR1250 BUTT	DR1230 BUTT SD	DGI-1230 BUTT	1 4	S2424 SSK24
UT2724 X 84 4SSK BUTT	2 2	DR1330 BUTT DR1350 BUTT	DR1330 BUTT SD	DGI-1330 BUTT	1 4	S2724 SSK27
UT3024 X 84 4SSK BUTT	2 2	DR1530 BUTT DR1550 BUTT	DR1530 BUTT SD	DGI-1530 BUTT	1 4	S3024 SSK30
UT3324 X 84 4SSK BUTT	2 2	DR1630 BUTT DR1650 BUTT	DR1630 BUTT SD	DGI-1630 BUTT	1 4	S3324 SSK33
UT3624 X 84 4SSK BUTT	2 2	DR1830 BUTT DR1850 BUTT	DR1830 BUTT SD	DGI-1830 BUTT	1 4	S3624 SSK36
UTILITY WITH SLIDING SHELVES • 90" HIGH						
UT1224 X 90 4SSK	1 1	DR1236 DR1250	DR1236 SD	DGI-1236	2 4	S1224 SSK12
UT1524 X 90 4SSK	1 1	DR1536 DR1550	DR1536 SD	DGI-1536	2 4	S1524 SSK15
UT1824 X 90 4SSK	1 1	DR1836 DR1850	DR1836 SD	DGI-1836	2 4	S1824 SSK18
UT2124 X 90 4SSK	1 1	DR2136 DR2150	DR2136 SD	DGI-2136	2 4	S2124 SSK21
UT2424 X 90 4SSK BUTT	2 2	DR1236 BUTT DR1250 BUTT	DR1236 BUTT SD	DGI-1236 BUTT	2 4	S2424 SSK24
UT2724 X 90 4SSK BUTT	2 2	DR1336 BUTT DR1350 BUTT	DR1336 BUTT SD	DGI-1336 BUTT	2 4	S2724 SSK27
UT3024 X 90 4SSK BUTT	2 2	DR1536 BUTT DR1550 BUTT	DR1536 BUTT SD	DGI-1536 BUTT	2 4	S3024 SSK30
UT3324 X 90 4SSK BUTT	2 2	DR1636 BUTT DR1650 BUTT	DR1636 BUTT SD	DGI-1636 BUTT	2 4	S3324 SSK33
UT3624 X 90 4SSK BUTT	2 2	DR1836 BUTT DR1850 BUTT	DR1836 BUTT SD	DGI-1836 BUTT	2 4	S3624 SSK36
UTILITY WITH SLIDING SHELVES • 93" HIGH						
UT1224 X 93 4SSK	1 1	DR1239 DR1250	DR1239 SD	DGI-1239	3 4	S1224 SSK12
UT1524 X 93 4SSK	1 1	DR1539 DR1550	DR1539 SD	DGI-1539	3 4	S1524 SSK15
UT1824 X 93 4SSK	1 1	DR1839 DR1850	DR1839 SD	DGI-1839	3 4	S1824 SSK18
UT2124 X 93 4SSK	1 1	DR2139 DR2150	DR2139 SD	DGI-2139	3 4	S2124 SSK21
UT2424 X 93 4SSK BUTT	2 2	DR1239 BUTT DR1250 BUTT	DR1239 BUTT SD	DGI-1239 BUTT	3 4	S2424 SSK24
UT2724 X 93 4SSK BUTT	2 2	DR1339 BUTT DR1350 BUTT	DR1339 BUTT SD	DGI-1339 BUTT	3 4	S2724 SSK27
UT3024 X 93 4SSK BUTT	2 2	DR1539 BUTT DR1550 BUTT	DR1539 BUTT SD	DGI-1539 BUTT	3 4	S3024 SSK30
UT3324 X 93 4SSK BUTT	2 2	DR1639 BUTT DR1650 BUTT	DR1639 BUTT SD	DGI-1639 BUTT	3 4	S3324 SSK33
UT3624 X 93 4SSK BUTT	2 2	DR1839 BUTT DR1850 BUTT	DR1839 BUTT SD	DGI-1839 BUTT	3 4	S3624 SSK36

SKU	Qty	DOOR Part Name	SPECIALTY DOOR Part Name	GLASS INSERT Part Name	Qty	ADJUSTABLE SHELF *For All Plywood Construction and/or Matching Interior Adjustable Shelf, refer to Parts Directory legend *Part Name
UTILITY WITH SLIDING SHELVES - 96" HIGH						
UT1224 X 96 4SSK	1 1	DR1242 DR1250	DR1242 SD	DGI-1242	3 4	S1224 SSK12
UT1524 X 96 4SSK	1 1	DR1542 DR1550	DR1542 SD	DGI-1542	3 4	S1524 SSK15
UT1824 X 96 4SSK	1 1	DR1842 DR1850	DR1842 SD	DGI-1842	3 4	S1824 SSK18
UT2124 X 96 4SSK	1 1	DR2142 DR2150	DR2142 SD	DGI-2142	3 4	S2124 SSK21
UT2424 X 96 4SSK BUTT	2 2	DR1242 BUTT DR1250 BUTT	DR1242 BUTT SD	DGI-1242 BUTT	3 4	S2424 SSK24
UT2724 X 96 4SSK BUTT	2 2	DR1342 BUTT DR1350 BUTT	DR1342 BUTT SD	DGI-1342 BUTT	3 4	S2724 SSK27
UT3024 X 96 4SSK BUTT	2 2	DR1542 BUTT DR1550 BUTT	DR1542 BUTT SD	DGI-1542 BUTT	3 4	S3024 SSK30
UT3324 X 96 4SSK BUTT	2 2	DR1642 BUTT DR1650 BUTT	DR1642 BUTT SD	DGI-1642 BUTT	3 4	S3324 SSK33
UT3624 X 96 4SSK BUTT	2 2	DR1842 BUTT DR1850 BUTT	DR1842 BUTT SD	DGI-1842 BUTT	3 4	S3624 SSK36

SKU	Qty	DOOR Part Name	Qty	SHELF / ACCESSORY *For All Plywood Construction Adjustable Shelf, refer to Parts Directory legend *Part Name
SINGLE OVEN CABINETS WITH 4 BUTT DOORS AND 1 DRAWER ▪ 84" HIGH				
OVS2784 BUTT 1DWR	2	DR1318 BUTT	-	N/A
	2	DR1324 BUTT		
OVS3084 BUTT 1DWR	2	DR1518 BUTT	-	N/A
	2	DR1524 BUTT		
OVS3384 BUTT 1DWR	2	DR1618 BUTT	-	N/A
	2	DR1624 BUTT		
SINGLE OVEN CABINETS WITH 4 BUTT DOORS AND 1 DRAWER ▪ 90" HIGH				
OVS2790 AS BUTT 1DWR	4	DR1324 BUTT	1	S2724
OVS3090 AS BUTT 1DWR	4	DR1524 BUTT	1	S3024
OVS3390 AS BUTT 1DWR	4	DR1624 BUTT	1	S3324
SINGLE OVEN CABINETS WITH 4 BUTT DOORS AND 1 DRAWER ▪ 93" HIGH				
OVS2793 AS BUTT 1DWR	2	DR1327 BUTT	1	S2724
	2	DR1324 BUTT		
OVS3093 AS BUTT 1DWR	2	DR1527 BUTT	1	S3024
	2	DR1524 BUTT		
OVS3393 AS BUTT 1DWR	2	DR1627 BUTT	1	S3324
	2	DR1624 BUTT		
SINGLE OVEN CABINETS WITH 4 BUTT DOORS AND 1 DRAWER ▪ 96" HIGH				
OVS2796 AS BUTT 1DWR	2	DR1330 BUTT	1	S2724
	2	DR1324 BUTT		
OVS3096 AS BUTT 1DWR	2	DR1530 BUTT	1	S3024
	2	DR1524 BUTT		
OVS3396 AS BUTT 1DWR	2	DR1630 BUTT	1	S3324
	2	DR1624 BUTT		
SINGLE OVEN CABINETS WITH 4 BUTT DOORS, 1 DRAWER AND 1 POT & PAN ORGANIZER ▪ 84" HIGH				
OVS2784 BUTT 1DWR CCBPPO	2	DR1318 BUTT		N/A
	2	DR1324 BUTT	1	BPPOKCC24
OVS3084 BUTT 1DWR CCBPPO	2	DR1518 BUTT		N/A
	2	DR1524 BUTT	1	BPPOKCC27
OVS3384 BUTT 1DWR CCBPPO	2	DR1618 BUTT		N/A
	2	DR1624 BUTT	1	BPPOKCC30
SINGLE OVEN CABINETS WITH 4 BUTT DOORS, 1 DRAWER AND 1 POT & PAN ORGANIZER ▪ 90" HIGH				
OVS2790 BUTT 1DWR CCBPPO	4	DR1324 BUTT	1	S2724
			1	BPPOKCC24
OVS3090 BUTT 1DWR CCBPPO	4	DR1524 BUTT	1	S3024
			1	BPPOKCC27
OVS3390 BUTT 1DWR CCBPPO	4	DR1624 BUTT	1	S3324
			1	BPPOKCC30
SINGLE OVEN CABINETS WITH 4 BUTT DOORS, 1 DRAWER AND 1 POT & PAN ORGANIZER ▪ 93" HIGH				
OVS2793 BUTT 1DWR CCBPPO	2	DR1327 BUTT	1	S2724
	2	DR1324 BUTT	1	BPPOKCC24
OVS3093 BUTT 1DWR CCBPPO	2	DR1527 BUTT	1	S3024
	2	DR1524 BUTT	1	BPPOKCC27
OVS3393 BUTT 1DWR CCBPPO	2	DR1627 BUTT	1	S3324
	2	DR1624 BUTT	1	BPPOKCC30
SINGLE OVEN CABINETS WITH 4 BUTT DOORS, 1 DRAWER AND 1 POT & PAN ORGANIZER ▪ 96" HIGH				
OVS2796 BUTT 1DWR CCBPPO	2	DR1330 BUTT	1	S2724
	2	DR1324 BUTT	1	BPPOKCC24
OVS3096 BUTT 1DWR CCBPPO	2	DR1530 BUTT	1	S3024
	2	DR1524 BUTT	1	BPPOKCC27
OVS3396 BUTT 1DWR CCBPPO	2	DR1630 BUTT	1	S3324
	2	DR1624 BUTT	1	BPPOKCC30

SKU	Qty	DRAWER FRONT		DRAWER BODY		
		Full Overlay	Standard Overlay	PORTFOLIO SELECT	PORTFOLIO	VALUE BUILT
		Part Name	Part Name	Part Name	Part Name	Part Name
SINGLE OVEN CABINETS WITH 4 BUTT DOORS AND 1 DRAWER • 84" HIGH						
OVS2784 BUTT 1DWR	-	DDF27	DDF27	DRB24 X 21DP DT FD	DRB24 X 21DP SG	DRB24 X 18DP SG
OVS3084 BUTT 1DWR	-	DDF30	DDF30	DRB27 X 21DP DT FD	DRB27 X 21DP SG	DRB27 X 18DP SG
OVS3384 BUTT 1DWR	-	DDF33	DDF33	DRB30 X 21DP DT FD	DRB30 X 21DP SG	DRB30 X 18DP SG
SINGLE OVEN CABINETS WITH 4 BUTT DOORS AND 1 DRAWER • 90" HIGH						
OVS2790 AS BUTT 1DWR	1	DDF27	DDF27	DRB24 X 21DP DT FD	DRB24 X 21DP SG	DRB24 X 18DP SG
OVS3090 AS BUTT 1DWR	1	DDF30	DDF30	DRB27 X 21DP DT FD	DRB27 X 21DP SG	DRB27 X 18DP SG
OVS3390 AS BUTT 1DWR	1	DDF33	DDF33	DRB30 X 21DP DT FD	DRB30 X 21DP SG	DRB30 X 18DP SG
SINGLE OVEN CABINETS WITH 4 BUTT DOORS AND 1 DRAWER • 93" HIGH						
OVS2793 AS BUTT 1DWR	2	DDF27	DDF27	DRB24 X 21DP DT FD	DRB24 X 21DP SG	N/A
OVS3093 AS BUTT 1DWR	2	DDF30	DDF30	DRB27 X 21DP DT FD	DRB27 X 21DP SG	N/A
OVS3393 AS BUTT 1DWR	2	DDF33	DDF33	DRB30 X 21DP DT FD	DRB30 X 21DP SG	N/A
SINGLE OVEN CABINETS WITH 4 BUTT DOORS AND 1 DRAWER • 96" HIGH						
OVS2796 AS BUTT 1DWR	2	DDF27	DDF27	DRB24 X 21DP DT FD	DRB24 X 21DP SG	DRB24 X 18DP SG
OVS3096 AS BUTT 1DWR	2	DDF30	DDF30	DRB27 X 21DP DT FD	DRB27 X 21DP SG	DRB27 X 18DP SG
OVS3396 AS BUTT 1DWR	2	DDF33	DDF33	DRB30 X 21DP DT FD	DRB30 X 21DP SG	DRB30 X 18DP SG
SINGLE OVEN CABINETS WITH 4 BUTT DOORS, 1 DRAWER AND 1 POT & PAN ORGANIZER • 84" HIGH						
OVS2784 BUTT 1DWR CCBPPO	1	DDF27	DDF27	DRB24 X 21DP DT FD	DRB24 X 21DP SG	N/A
OVS3084 BUTT 1DWR CCBPPO	1	DDF30	DDF30	DRB27 X 21DP DT FD	DRB27 X 21DP SG	N/A
OVS3384 BUTT 1DWR CCBPPO	1	DDF33	DDF33	DRB30 X 21DP DT FD	DRB30 X 21DP SG	N/A
SINGLE OVEN CABINETS WITH 4 BUTT DOORS, 1 DRAWER AND 1 POT & PAN ORGANIZER • 90" HIGH						
OVS2790 BUTT 1DWR CCBPPO	1	DDF27	DDF27	DRB24 X 21DP DT FD	DRB24 X 21DP SG	N/A
OVS3090 BUTT 1DWR CCBPPO	1	DDF30	DDF30	DRB27 X 21DP DT FD	DRB27 X 21DP SG	N/A
OVS3390 BUTT 1DWR CCBPPO	1	DDF33	DDF33	DRB30 X 21DP DT FD	DRB30 X 21DP SG	N/A
SINGLE OVEN CABINETS WITH 4 BUTT DOORS, 1 DRAWER AND 1 POT & PAN ORGANIZER • 93" HIGH						
OVS2793 BUTT 1DWR CCBPPO	2	DDF27	DDF27	DRB24 X 21DP DT FD	DRB24 X 21DP SG	N/A
OVS3093 BUTT 1DWR CCBPPO	2	DDF30	DDF30	DRB27 X 21DP DT FD	DRB27 X 21DP SG	N/A
OVS3393 BUTT 1DWR CCBPPO	2	DDF33	DDF33	DRB30 X 21DP DT FD	DRB30 X 21DP SG	N/A
SINGLE OVEN CABINETS WITH 4 BUTT DOORS, 1 DRAWER AND 1 POT & PAN ORGANIZER • 96" HIGH						
OVS2796 BUTT 1DWR CCBPPO	2	DDF27	DDF27	DRB24 X 21DP DT FD	DRB24 X 21DP SG	N/A
OVS3096 BUTT 1DWR CCBPPO	2	DDF30	DDF30	DRB27 X 21DP DT FD	DRB27 X 21DP SG	N/A
OVS3396 BUTT 1DWR CCBPPO	2	DDF33	DDF33	DRB30 X 21DP DT FD	DRB30 X 21DP SG	N/A

SKU	Qty	DOOR Part Name	Qty	SHELF / ACCESSORY *For All Plywood Construction Adjustable Shelf, refer to Parts Directory legend *Part Name
SINGLE OVEN CABINETS WITH 4 BUTT DOORS AND 2 DRAWERS • 84" HIGH				
OVS2784 BUTT 2DWR	2	DR1318 BUTT	-	N/A
	2	DR1324 BUTT		
OVS3084 BUTT 2DWR	2	DR1518 BUTT	-	N/A
	2	DR1524 BUTT		
OVS3384 BUTT 2DWR	2	DR1618 BUTT	-	N/A
	2	DR1624 BUTT		
SINGLE OVEN CABINETS WITH 4 BUTT DOORS AND 2 DRAWERS • 90" HIGH				
OVS2790 AS BUTT 2DWR	4	DR1324 BUTT	1	S2724
OVS3090 AS BUTT 2DWR	4	DR1524 BUTT	1	S3024
OVS3390 AS BUTT 2DWR	4	DR1624 BUTT	1	S3324
SINGLE OVEN CABINETS WITH 4 BUTT DOORS AND 2 DRAWERS • 93" HIGH				
OVS2793 AS BUTT 2DWR	2	DR1327 BUTT	2	S2724
	2	DR1324 BUTT		
OVS3093 AS BUTT 2DWR	2	DR1527 BUTT	2	S3024
	2	DR1524 BUTT		
OVS3393 AS BUTT 2DWR	2	DR1627 BUTT	2	S3324
	2	DR1624 BUTT		
SINGLE OVEN CABINETS WITH 4 BUTT DOORS AND 2 DRAWERS • 96" HIGH				
OVS2796 AS BUTT 2DWR	2	DR1330 BUTT	2	S2724
	2	DR1324 BUTT		
OVS3096 AS BUTT 2DWR	2	DR1530 BUTT	2	S3024
	2	DR1524 BUTT		
OVS3396 AS BUTT 2DWR	2	DR1630 BUTT	2	S3324
	2	DR1624 BUTT		
SINGLE OVEN CABINETS WITH 4 BUTT DOORS, 2 DRAWERS AND 1 POT & PAN ORGANIZER • 84" HIGH				
OVS2784 BUTT 2DWR CCBPPO	2	DR1318 BUTT		N/A
	2	DR1324 BUTT	2	BPPOKCC24
OVS3084 BUTT 2DWR CCBPPO	2	DR1518 BUTT		N/A
	2	DR1524 BUTT	2	BPPOKCC27
OVS3384 BUTT 2DWR CCBPPO	2	DR1618 BUTT		N/A
	2	DR1624 BUTT	2	BPPOKCC30
SINGLE OVEN CABINETS WITH 4 BUTT DOORS, 2 DRAWERS AND 1 POT & PAN ORGANIZER • 90" HIGH				
OVS2790 BUTT 2DWR CCBPPO	4	DR1324 BUTT	1	S2724
			1	BPPOKCC24
OVS3090 BUTT 2DWR CCBPPO	4	DR1524 BUTT	1	S3024
			1	BPPOKCC27
OVS3390 BUTT 2DWR CCBPPO	4	DR1624 BUTT	1	S3324
			1	BPPOKCC30
SINGLE OVEN CABINETS WITH 4 BUTT DOORS, 2 DRAWERS AND 1 POT & PAN ORGANIZER • 93" HIGH				
OVS2793 BUTT 2DWR CCBPPO	2	DR1327 BUTT	2	S2724
	2	DR1324 BUTT	1	BPPOKCC24
OVS3093 BUTT 2DWR CCBPPO	2	DR1527 BUTT	2	S3024
	2	DR1524 BUTT	1	BPPOKCC27
OVS3393 BUTT 2DWR CCBPPO	2	DR1627 BUTT	2	S3324
	2	DR1624 BUTT	1	BPPOKCC30
SINGLE OVEN CABINETS WITH 4 BUTT DOORS, 2 DRAWERS AND 1 POT & PAN ORGANIZER • 96" HIGH				
OVS2796 BUTT 2DWR CCBPPO	2	DR1330 BUTT	2	S2724
	2	DR1324 BUTT	1	BPPOKCC24
OVS3096 BUTT 2DWR CCBPPO	2	DR1530 BUTT	2	S3024
	2	DR1524 BUTT	1	BPPOKCC27
OVS3396 BUTT 2DWR CCBPPO	2	DR1630 BUTT	2	S3324
	2	DR1624 BUTT	1	BPPOKCC30

SKU	Qty	DRAWER FRONT		DRAWER BODY		
		Full Overlay	Standard Overlay	PORTFOLIO SELECT	PORTFOLIO	VALUE BUILT
		Part Name	Part Name	Part Name	Part Name	Part Name
SINGLE OVEN CABINETS WITH 4 BUTT DOORS AND 2 DRAWERS • 84" HIGH						
OVS2784 BUTT 2DWR	2	DDF27	DDF27	DRB24 X 21DP DT FD	DRB24 X 21DP SG	DRB24 X 18DP SG
OVS3084 BUTT 2DWR	2	DDF30	DDF30	DRB27 X 21DP DT FD	DRB27 X 21DP SG	DRB27 X 18DP SG
OVS3384 BUTT 2DWR	2	DDF33	DDF33	DRB30 X 21DP DT FD	DRB30 X 21DP SG	DRB30 X 18DP SG
SINGLE OVEN CABINETS WITH 4 BUTT DOORS AND 2 DRAWERS • 90" HIGH						
OVS2790 AS BUTT 2DWR	2	DDF27	DDF27	DRB24 X 21DP DT FD	DRB24 X 21DP SG	DRB24 X 18DP SG
OVS3090 AS BUTT 2DWR	2	DDF30	DDF30	DRB27 X 21DP DT FD	DRB27 X 21DP SG	DRB27 X 18DP SG
OVS3390 AS BUTT 2DWR	2	DDF33	DDF33	DRB30 X 21DP DT FD	DRB30 X 21DP SG	DRB30 X 18DP SG
SINGLE OVEN CABINETS WITH 4 BUTT DOORS AND 2 DRAWERS • 93" HIGH						
OVS2793 AS BUTT 2DWR	2	DDF27	DDF27	DRB24 X 21DP DT FD	DRB24 X 21DP SG	N/A
OVS3093 AS BUTT 2DWR	2	DDF30	DDF30	DRB27 X 21DP DT FD	DRB27 X 21DP SG	N/A
OVS3393 AS BUTT 2DWR	2	DDF33	DDF33	DRB30 X 21DP DT FD	DRB30 X 21DP SG	N/A
SINGLE OVEN CABINETS WITH 4 BUTT DOORS AND 2 DRAWERS • 96" HIGH						
OVS2796 AS BUTT 2DWR	2	DDF27	DDF27	DRB24 X 21DP DT FD	DRB24 X 21DP SG	DRB24 X 18DP SG
OVS3096 AS BUTT 2DWR	2	DDF30	DDF30	DRB27 X 21DP DT FD	DRB27 X 21DP SG	DRB27 X 18DP SG
OVS3396 AS BUTT 2DWR	2	DDF33	DDF33	DRB30 X 21DP DT FD	DRB30 X 21DP SG	DRB30 X 18DP SG
SINGLE OVEN CABINETS WITH 4 BUTT DOORS, 2 DRAWERS AND 1 POT & PAN ORGANIZER • 84" HIGH						
OVS2784 BUTT 2DWR CCBPPO	1	DDF27	DDF27	DRB24 X 21DP DT FD	DRB24 X 21DP SG	N/A
OVS3084 BUTT 2DWR CCBPPO	1	DDF30	DDF30	DRB27 X 21DP DT FD	DRB27 X 21DP SG	N/A
OVS3384 BUTT 2DWR CCBPPO	1	DDF33	DDF33	DRB30 X 21DP DT FD	DRB30 X 21DP SG	N/A
SINGLE OVEN CABINETS WITH 4 BUTT DOORS, 2 DRAWERS AND 1 POT & PAN ORGANIZER • 90" HIGH						
OVS2790 BUTT 2DWR CCBPPO	1	DDF27	DDF27	DRB24 X 21DP DT FD	DRB24 X 21DP SG	N/A
OVS3090 BUTT 2DWR CCBPPO	1	DDF30	DDF30	DRB27 X 21DP DT FD	DRB27 X 21DP SG	N/A
OVS3390 BUTT 2DWR CCBPPO	1	DDF33	DDF33	DRB30 X 21DP DT FD	DRB30 X 21DP SG	N/A
SINGLE OVEN CABINETS WITH 4 BUTT DOORS, 2 DRAWERS AND 1 POT & PAN ORGANIZER • 93" HIGH						
OVS2793 BUTT 2DWR CCBPPO	2	DDF27	DDF27	DRB24 X 21DP DT FD	DRB24 X 21DP SG	N/A
OVS3093 BUTT 2DWR CCBPPO	2	DDF30	DDF30	DRB27 X 21DP DT FD	DRB27 X 21DP SG	N/A
OVS3393 BUTT 2DWR CCBPPO	2	DDF33	DDF33	DRB30 X 21DP DT FD	DRB30 X 21DP SG	N/A
SINGLE OVEN CABINETS WITH 4 BUTT DOORS, 2 DRAWERS AND 1 POT & PAN ORGANIZER • 96" HIGH						
OVS2796 BUTT 2DWR CCBPPO	2	DDF27	DDF27	DRB24 X 21DP DT FD	DRB24 X 21DP SG	N/A
OVS3096 BUTT 2DWR CCBPPO	2	DDF30	DDF30	DRB27 X 21DP DT FD	DRB27 X 21DP SG	N/A
OVS3396 BUTT 2DWR CCBPPO	2	DDF33	DDF33	DRB30 X 21DP DT FD	DRB30 X 21DP SG	N/A

SKU	Qty	DOOR Part Name	Qty	SHELF / ACCESSORY *For All Plywood Construction Adjustable Shelf, refer to Parts Directory legend *Part Name
SINGLE OVEN CABINETS WITH 2 BUTT DOORS 4 DRAWERS • 84" HIGH				
OVS2784 BUTT 4DWR	2	DR1318 BUTT	-	N/A
OVS3084 BUTT 4DWR	2	DR1518 BUTT	-	N/A
OVS3384 BUTT 4DWR	2	DR1618 BUTT	-	N/A
SINGLE OVEN CABINETS WITH 2 BUTT DOORS 4 DRAWERS • 90" HIGH				
OVS2790 AS BUTT 4DWR	2	DR1324 BUTT	1	S2724
OVS3090 AS BUTT 4DWR	2	DR1524 BUTT	1	S3024
OVS3390 AS BUTT 4DWR	2	DR1624 BUTT	1	S3324
SINGLE OVEN CABINETS WITH 2 BUTT DOORS 4 DRAWERS • 93" HIGH				
OVS2793 AS BUTT 4DWR	2	DR1327 BUTT	2	S2724
OVS3093 AS BUTT 4DWR	2	DR1527 BUTT	2	S3024
OVS3393 AS BUTT 4DWR	2	DR1627 BUTT	2	S3324
SINGLE OVEN CABINETS WITH 2 BUTT DOORS 4 DRAWERS • 96" HIGH				
OVS2796 AS BUTT 4DWR	2	DR1330 BUTT	2	S2724
OVS3096 AS BUTT 4DWR	2	DR1530 BUTT	2	S3024
OVS3396 AS BUTT 4DWR	2	DR1630 BUTT	2	S3324

SKU	Qty	DRAWER FRONT		DRAWER BODY		
		Full Overlay	Standard Overlay	PORTFOLIO SELECT	PORTFOLIO	VALUE BUILT
		Part Name	Part Name	Part Name	Part Name	Part Name
SINGLE OVEN CABINETS WITH 2 BUTT DOORS 4 DRAWERS ▪ 84" HIGH						
OVS2784 BUTT 4DWR	2	DDF27	DDF27	DRB24 X 21DP DT FD	DRB24 X 21DP SG	DRB24 X 18DP SG
	2	DDF27M	DDF27D	DRB24M X 21DP DT FD	DRB24M X 21DP SG	DRB24M X 18DP SG
OVS3084 BUTT 4DWR	2	DDF30	DDF30	DRB27 X 21DP DT FD	DRB27 X 21DP SG	DRB27 X 18DP SG
	2	DDF30M	DDF30D	DRB27M X 21DP DT FD	DRB27M X 21DP SG	DRB27M X 18DP SG
OVS3384 BUTT 4DWR	2	DDF33	DDF33	DRB30 X 21DP DT FD	DRB30 X 21DP SG	DRB30 X 18DP SG
	2	DDF33M	DDF33D	DRB30M X 21DP DT FD	DRB30M X 21DP SG	DRB30M X 18DP SG
SINGLE OVEN CABINETS WITH 2 BUTT DOORS 4 DRAWERS ▪ 90" HIGH						
OVS2790 AS BUTT 4DWR	2	DDF27	DDF27	DRB24 X 21DP DT FD	DRB24 X 21DP SG	DRB24 X 18DP SG
	2	DDF27M	DDF27D	DRB24M X 21DP DT FD	DRB24M X 21DP SG	DRB24M X 18DP SG
OVS3090 AS BUTT 4DWR	2	DDF30	DDF30	DRB27 X 21DP DT FD	DRB27 X 21DP SG	DRB27 X 18DP SG
	2	DDF30M	DDF30D	DRB27M X 21DP DT FD	DRB27M X 21DP SG	DRB27M X 18DP SG
OVS3390 AS BUTT 4DWR	2	DDF33	DDF33	DRB30 X 21DP DT FD	DRB30 X 21DP SG	DRB30 X 18DP SG
	2	DDF33M	DDF33D	DRB30M X 21DP DT FD	DRB30M X 21DP SG	DRB30M X 18DP SG
SINGLE OVEN CABINETS WITH 2 BUTT DOORS 4 DRAWERS ▪ 93" HIGH						
OVS2793 AS BUTT 4DWR	2	DDF27	DDF27	DRB24 X 21DP DT FD	DRB24 X 21DP SG	N/A
	2	DDF27M	DDF27D	DRB24M X 21DP DT FD	DRB24M X 21DP SG	
OVS3093 AS BUTT 4DWR	2	DDF30	DDF30	DRB27 X 21DP DT FD	DRB27 X 21DP SG	N/A
	2	DDF30M	DDF30D	DRB27M X 21DP DT FD	DRB27M X 21DP SG	
OVS3393 AS BUTT 4DWR	2	DDF33	DDF33	DRB30 X 21DP DT FD	DRB30 X 21DP SG	N/A
	2	DDF33M	DDF33D	DRB30M X 21DP DT FD	DRB30M X 21DP SG	
SINGLE OVEN CABINETS WITH 2 BUTT DOORS 4 DRAWERS ▪ 96" HIGH						
OVS2796 AS BUTT 4DWR	2	DDF27	DDF27	DRB24 X 21DP DT FD	DRB24 X 21DP SG	DRB24 X 18DP SG
	2	DDF27M	DDF27D	DRB24M X 21DP DT FD	DRB24M X 21DP SG	DRB24M X 18DP SG
OVS3096 AS BUTT 4DWR	2	DDF30	DDF30	DRB27 X 21DP DT FD	DRB27 X 21DP SG	DRB27 X 18DP SG
	2	DDF30M	DDF30D	DRB27M X 21DP DT FD	DRB27M X 21DP SG	DRB27M X 18DP SG
OVS3396 AS BUTT 4DWR	2	DDF33	DDF33	DRB30 X 21DP DT FD	DRB30 X 21DP SG	DRB30 X 18DP SG
	2	DDF33M	DDF33D	DRB30M X 21DP DT FD	DRB30M X 21DP SG	DRB30M X 18DP SG

SKU	Qty	DOOR Part Name	Qty	ADJUSTABLE SHELF *For All Plywood Construction Adjustable Shelf, refer to Parts Directory legend *Part Name
SINGLE OVEN CABINETS WITH 4 BUTT DOORS ▪ 84" HIGH				
OVS2784 BUTT	2 2	DR1318 BUTT DR1324 BUTT	-	N/A
OVS3084 BUTT	2 2	DR1518 BUTT DR1524 BUTT	-	N/A
OVS3384 BUTT	2 2	DR1618 BUTT DR1624 BUTT	-	N/A
SINGLE OVEN CABINETS WITH 4 BUTT DOORS ▪ 90" HIGH				
OVS2790 AS BUTT	4	DR1324 BUTT	1	S2724
OVS3090 AS BUTT	4	DR1524 BUTT	1	S3024
OVS3390 AS BUTT	4	DR1624 BUTT	1	S3324
SINGLE OVEN CABINETS WITH 4 BUTT DOORS ▪ 93" HIGH				
OVS2793 AS BUTT	2 2	DR1327 BUTT DR1324 BUTT	2	S2724
OVS3093 AS BUTT	2 2	DR1527 BUTT DR1524 BUTT	2	S3024
OVS3393 AS BUTT	2 2	DR1627 BUTT DR1624 BUTT	2	S3324
SINGLE OVEN CABINETS WITH 4 BUTT DOORS ▪ 96" HIGH				
OVS2796 AS BUTT	2 2	DR1330 BUTT DR1324 BUTT	2	S2724
OVS3096 AS BUTT	2 2	DR1530 BUTT DR1524 BUTT	2	S3024
OVS3396 AS BUTT	2 2	DR1630 BUTT DR1624 BUTT	2	S3324
SINGLE OVEN CABINETS WITH POT & PAN ORGANIZER ▪ 84" HIGH				
OVS2784 BUTT CCBPPO	2 2	DR1318 BUTT DR1324 BUTT	1	N/A BPPOKCC24
OVS3084 BUTT CCBPPO	2 2	DR1518 BUTT DR1524 BUTT	1	N/A BPPOKCC27
OVS3384 BUTT CCBPPO	2 2	DR1618 BUTT DR1624 BUTT	1	N/A BPPOKCC30
SINGLE OVEN CABINETS WITH POT & PAN ORGANIZER ▪ 90" HIGH				
OVS2790 BUTT CCBPPO	4	DR1324 BUTT	1 1	S2724 BPPOKCC24
OVS3090 BUTT CCBPPO	4	DR1524 BUTT	1 1	S3024 BPPOKCC27
OVS3390 BUTT CCBPPO	4	DR1624 BUTT	1 1	S3324 BPPOKCC30
SINGLE OVEN CABINETS WITH POT & PAN ORGANIZER ▪ 93" HIGH				
OVS2793 BUTT CCBPPO	2 2	DR1327 BUTT DR1324 BUTT	2 1	S2724 BPPOKCC24
OVS3093 BUTT CCBPPO	2 2	DR1527 BUTT DR1524 BUTT	2 1	S3024 BPPOKCC27
OVS3393 BUTT CCBPPO	2 2	DR1627 BUTT DR1624 BUTT	2 1	S3324 BPPOKCC30
SINGLE OVEN CABINETS WITH POT & PAN ORGANIZER ▪ 96" HIGH				
OVS2796 BUTT CCBPPO	2 2	DR1330 BUTT DR1324 BUTT	2 1	S2724 BPPOKCC24
OVS3096 BUTT CCBPPO	2 2	DR1530 BUTT DR1524 BUTT	2 1	S3024 BPPOKCC27
OVS3396 BUTT CCBPPO	2 2	DR1630 BUTT DR1624 BUTT	2 1	S3324 BPPOKCC30

Notes

SKU	Qty	DOOR Part Name	Qty	SHELF / ACCESSORY *For All Plywood Construction Adjustable Shelf, refer to Parts Directory legend *Part Name
DOUBLE OVEN CABINETS WITH 2 BUTT DOORS, 1 DRAWER • 84" HIGH				
OVD2784 BUTT	2	DR1318 BUTT	-	N/A
OVD3084 BUTT	2	DR1518 BUTT	-	N/A
OVD3384 BUTT	2	DR1618 BUTT	-	N/A
DOUBLE OVEN CABINETS WITH 2 BUTT DOORS, 1 DRAWER • 90" HIGH				
OVD2790 AS BUTT	2	DR1324 BUTT	1	S2724
OVD3090 AS BUTT	2	DR1524 BUTT	1	S3024
OVD3390 AS BUTT	2	DR1624 BUTT	1	S3324
DOUBLE OVEN CABINETS WITH 2 BUTT DOORS, 1 DRAWER • 93" HIGH				
OVD2793 AS BUTT	2	DR1327 BUTT	2	S2724
OVD3093 AS BUTT	2	DR1527 BUTT	2	S3024
OVD3393 AS BUTT	2	DR1627 BUTT	2	S3324
DOUBLE OVEN CABINETS WITH 2 BUTT DOORS, 1 DRAWER • 96" HIGH				
OVD2796 AS BUTT	2	DR1330 BUTT	2	S2724
OVD3096 AS BUTT	2	DR1530 BUTT	2	S3024
OVD3396 AS BUTT	2	DR1630 BUTT	2	S3324
DOUBLE OVEN CABINETS WITH 2 BUTT DOORS AND 1 LARGE DRAWER • 84" HIGH				
OVD2784 BUTT 1DDWR	2	DR1318 BUTT	-	N/A
OVD3084 BUTT 1DDWR	2	DR1518 BUTT	-	N/A
OVD3384 BUTT 1DDWR	2	DR1618 BUTT	-	N/A
DOUBLE OVEN CABINETS WITH 2 BUTT DOORS AND 1 LARGE DRAWER • 90" HIGH				
OVD2790 AS BUTT 1DDWR	2	DR1324 BUTT	1	S2724
OVD3090 AS BUTT 1DDWR	2	DR1524 BUTT	1	S3024
OVD3390 AS BUTT 1DDWR	2	DR1624 BUTT	1	S3324
DOUBLE OVEN CABINETS WITH 2 BUTT DOORS AND 1 LARGE DRAWER • 93" HIGH				
OVD2793 AS BUTT 1DDWR	2	DR1327 BUTT	2	S2724
OVD3093 AS BUTT 1DDWR	2	DR1527 BUTT	2	S3024
OVD3393 AS BUTT 1DDWR	2	DR1627 BUTT	2	S3324
DOUBLE OVEN CABINETS WITH 2 BUTT DOORS AND 1 LARGE DRAWER • 96" HIGH				
OVD2796 AS BUTT 1DDWR	2	DR1330 BUTT	2	S2724
OVD3096 AS BUTT 1DDWR	2	DR1530 BUTT	2	S3024
OVD3396 AS BUTT 1DDWR	2	DR1630 BUTT	2	S3324
DOUBLE OVEN CABINETS WITH 2 BUTT DOORS AND 2 DRAWERS • 84" HIGH				
OVD2784 BUTT 2DWR	2	DR1318 BUTT	-	N/A
OVD3084 BUTT 2DWR	2	DR1518 BUTT	-	N/A
OVD3384 BUTT 2DWR	2	DR1618 BUTT	-	N/A
DOUBLE OVEN CABINETS WITH 2 BUTT DOORS AND 2 DRAWERS • 90" HIGH				
OVD2790 AS BUTT 2DWR	2	DR1324 BUTT	1	S2724
OVD3090 AS BUTT 2DWR	2	DR1524 BUTT	1	S3024
OVD3390 AS BUTT 2DWR	2	DR1624 BUTT	1	S3324
DOUBLE OVEN CABINETS WITH 2 BUTT DOORS AND 2 DRAWERS • 93" HIGH				
OVD2793 AS BUTT 2DWR	2	DR1327 BUTT	2	S2724
OVD3093 AS BUTT 2DWR	2	DR1527 BUTT	2	S3024
OVD3393 AS BUTT 2DWR	2	DR1627 BUTT	2	S3324
DOUBLE OVEN CABINETS WITH 2 BUTT DOORS AND 2 DRAWERS • 96" HIGH				
OVD2796 AS BUTT 2DWR	2	DR1330 BUTT	2	S2724
OVD3096 AS BUTT 2DWR	2	DR1530 BUTT	2	S3024
OVD3396 AS BUTT 2DWR	2	DR1630 BUTT	2	S3324
OVEN MICROWAVE CABINET • 96" HIGH				
OMC3396 AS OS BUTT	2	DR1624 BUTT	1	S3324

SKU	Qty	DRAWER FRONT		DRAWER BODY		
		Full Overlay	Standard Overlay	PORTFOLIO SELECT	PORTFOLIO	VALUE BUILT
		Part Name	Part Name	Part Name	Part Name	Part Name
DOUBLE OVEN CABINETS WITH 2 BUTT DOORS, 1 DRAWER • 84" HIGH						
OVD2784 BUTT	1	DDFOV27	DDF27	DRB24 X 21DP DT FD	DRB24 X 21DP SG	DRB24 X 18DP SG
OVD3084 BUTT	1	DDFOV30	DDF30	DRB27 X 21DP DT FD	DRB27 X 21DP SG	DRB27 X 18DP SG
OVD3384 BUTT	1	DDFOV33	DDF33	DRB30 X 21DP DT FD	DRB30 X 21DP SG	DRB30 X 18DP SG
DOUBLE OVEN CABINETS WITH 2 BUTT DOORS, 1 DRAWER • 90" HIGH						
OVD2790 AS BUTT	1	DDFOV27	DDF27	DRB24 X 21DP DT FD	DRB24 X 21DP SG	DRB24 X 18DP SG
OVD3090 AS BUTT	1	DDFOV30	DDF30	DRB27 X 21DP DT FD	DRB27 X 21DP SG	DRB27 X 18DP SG
OVD3390 AS BUTT	1	DDFOV33	DDF33	DRB30 X 21DP DT FD	DRB30 X 21DP SG	DRB30 X 18DP SG
DOUBLE OVEN CABINETS WITH 2 BUTT DOORS, 1 DRAWER • 93" HIGH						
OVD2793 AS BUTT	1	DDFOV27	DDF27	DRB24 X 21DP DT FD	DRB24 X 21DP SG	N/A
OVD3093 AS BUTT	1	DDFOV30	DDF30	DRB27 X 21DP DT FD	DRB27 X 21DP SG	N/A
OVD3393 AS BUTT	1	DDFOV33	DDF33	DRB30 X 21DP DT FD	DRB30 X 21DP SG	N/A
DOUBLE OVEN CABINETS WITH 2 BUTT DOORS, 1 DRAWER • 96" HIGH						
OVD2796 AS BUTT	1	DDFOV27	DDF27	DRB24 X 21DP DT FD	DRB24 X 21DP SG	DRB24 X 18DP SG
OVD3096 AS BUTT	1	DDFOV30	DDF30	DRB27 X 21DP DT FD	DRB27 X 21DP SG	DRB27 X 18DP SG
OVD3396 AS BUTT	1	DDFOV33	DDF33	DRB30 X 21DP DT FD	DRB30 X 21DP SG	DRB30 X 18DP SG
DOUBLE OVEN CABINETS WITH 2 BUTT DOORS AND 1 LARGE DRAWER • 84" HIGH						
OVD2784 BUTT 1DDWR	1	DDF27M	DDF27D	DRB24M X 21DP DT FD	DRB24M X 21DP SG	DRB24M X 18DP SG
OVD3084 BUTT 1DDWR	1	DDF30M	DDF30D	DRB27M X 21DP DT FD	DRB27M X 21DP SG	DRB27M X 18DP SG
OVD3384 BUTT 1DDWR	1	DDF33M	DDF33D	DRB30M X 21DP DT FD	DRB30M X 21DP SG	DRB30M X 18DP SG
DOUBLE OVEN CABINETS WITH 2 BUTT DOORS AND 1 LARGE DRAWER • 90" HIGH						
OVD2790 AS BUTT 1DDWR	1	DDF27M	DDF27D	DRB24M X 21DP DT FD	DRB24M X 21DP SG	DRB24M X 18DP SG
OVD3090 AS BUTT 1DDWR	1	DDF30M	DDF30D	DRB27M X 21DP DT FD	DRB27M X 21DP SG	DRB27M X 18DP SG
OVD3390 AS BUTT 1DDWR	1	DDF33M	DDF33D	DRB30M X 21DP DT FD	DRB30M X 21DP SG	DRB30M X 18DP SG
DOUBLE OVEN CABINETS WITH 2 BUTT DOORS AND 1 LARGE DRAWER • 93" HIGH						
OVD2793 AS BUTT 1DDWR	1	DDF27M	DDF27D	DRB24M X 21DP DT FD	DRB24M X 21DP SG	N/A
OVD3093 AS BUTT 1DDWR	1	DDF30M	DDF30D	DRB27M X 21DP DT FD	DRB27M X 21DP SG	N/A
OVD3393 AS BUTT 1DDWR	1	DDF33M	DDF33D	DRB30M X 21DP DT FD	DRB30M X 21DP SG	N/A
DOUBLE OVEN CABINETS WITH 2 BUTT DOORS AND 1 LARGE DRAWER • 96" HIGH						
OVD2796 AS BUTT 1DDWR	1	DDF27M	DDF27D	DRB24M X 21DP DT FD	DRB24M X 21DP SG	DRB24M X 18DP SG
OVD3096 AS BUTT 1DDWR	1	DDF30M	DDF30D	DRB27M X 21DP DT FD	DRB27M X 21DP SG	DRB27M X 18DP SG
OVD3396 AS BUTT 1DDWR	1	DDF33M	DDF33D	DRB30M X 21DP DT FD	DRB30M X 21DP SG	DRB30M X 18DP SG
DOUBLE OVEN CABINETS WITH 2 BUTT DOORS AND 2 DRAWERS • 84" HIGH						
OVD2784 BUTT 2DWR	2	DDF27	DDF27	DRB24 X 21DP DT FD	DRB24 X 21DP SG	DRB24 X 18DP SG
OVD3084 BUTT 2DWR	2	DDF30	DDF30	DRB27 X 21DP DT FD	DRB27 X 21DP SG	DRB27 X 18DP SG
OVD3384 BUTT 2DWR	2	DDF33	DDF33	DRB30 X 21DP DT FD	DRB30 X 21DP SG	DRB30 X 18DP SG
DOUBLE OVEN CABINETS WITH 2 BUTT DOORS AND 2 DRAWERS • 90" HIGH						
OVD2790 AS BUTT 2DWR	2	DDF27	DDF27	DRB24 X 21DP DT FD	DRB24 X 21DP SG	DRB24 X 18DP SG
OVD3090 AS BUTT 2DWR	2	DDF30	DDF30	DRB27 X 21DP DT FD	DRB27 X 21DP SG	DRB27 X 18DP SG
OVD3390 AS BUTT 2DWR	2	DDF33	DDF33	DRB30 X 21DP DT FD	DRB30 X 21DP SG	DRB30 X 18DP SG
DOUBLE OVEN CABINETS WITH 2 BUTT DOORS AND 2 DRAWERS • 93" HIGH						
OVD2793 AS BUTT 2DWR	2	DDF27	DDF27	DRB24 X 21DP DT FD	DRB24 X 21DP SG	N/A
OVD3093 AS BUTT 2DWR	2	DDF30	DDF30	DRB27 X 21DP DT FD	DRB27 X 21DP SG	N/A
OVD3393 AS BUTT 2DWR	2	DDF33	DDF33	DRB30 X 21DP DT FD	DRB30 X 21DP SG	N/A
DOUBLE OVEN CABINETS WITH 2 BUTT DOORS AND 2 DRAWERS • 96" HIGH						
OVD2796 AS BUTT 2DWR	2	DDF27	DDF27	DRB24 X 21DP DT FD	DRB24 X 21DP SG	DRB24 X 18DP SG
OVD3096 AS BUTT 2DWR	2	DDF30	DDF30	DRB27 X 21DP DT FD	DRB27 X 21DP SG	DRB27 X 18DP SG
OVD3396 AS BUTT 2DWR	2	DDF33	DDF33	DRB30 X 21DP DT FD	DRB30 X 21DP SG	DRB30 X 18DP SG
OVEN MICROWAVE CABINET • 96" HIGH						
OMC3396 AS OS BUTT	1	DDFOV33	DDF33	DRB30 X 21DP DT FD	DRB30 X 21DP SG	DRB30 X 18DP SG

SKU	Qty	DOOR Part Name	Qty	DRAWER FRONT/PANEL Full Overlay Part Name	 Standard Overlay Part Name	Qty	ADJUSTABLE SHELF/ACCESSORY PORTFOLIO SELECT Part Name	 PORTFOLIO & VALUE BUILT Part Name
VANITY BASE • 31 1/8" HIGH								
VB12	1	DR1221V	1	DDF12	DDF12	1	DRB12 X 18DP DT FD	DRB12 X 18DP SG
VB15	1	DR1521V	1	DDF15	DDF15	1	DRB15 X 18DP DT FD	DRB15 X 18DP SG
VB18	1	DR1821V	1	DDF18	DDF18	1	DRB18 X 18DP DT FD	DRB18 X 18DP SG
VB21	1	DR2121V	1	DDF21	DDF21	1	DRB21 X 18DP DT FD	DRB21 X 18DP SG
VB24 BUTT	2	DR1221V BUTT	1	DDF24	DDF24	1	DRB24 X 18DP DT FD	DRB24 X 18DP SG
VB27 BUTT	2	DR1321V BUTT	1	DDF27	DDF27	1	DRB27 X 18DP DT FD	DRB27 X 18DP SG
VB30 BUTT	2	DR1521V BUTT	1	DDF30	DDF30	1	DRB30 X 18DP DT FD	DRB30 X 18DP SG
VB33 BUTT	2	DR1621V BUTT	1	DDF33	DDF33	1	DRB33 X 18DP DT FD	DRB33 X 18DP SG
VB36 BUTT	2	DR1821V BUTT	1	DDF36	DDF36	1	DRB36 X 18DP DT FD	DRB36 X 18DP SG
VANITY SINK BASE WITH TOP DRAWERS • 31 1/8" HIGH								
VAN36 BUTT	2	DR1821V BUTT	3	DDF12	DDF12	2	DRB10 X 18DP DT FD	DRB10 X 18DP SG
VAN39	2	DR1921V	2 1	DDF12 DDF15	DDF12 DDF15	2	DRB12 X 18DP DT FD	DRB12 X 18DP SG
VAN42	2	DR2121V	2 1	DDF12 DDF18	DDF12 DDF18	2	DRB12 X 18DP DT FD	DRB12 X 18DP SG
VAN48	2 1	DR1521V DR1821V	2 1	DDF15 DDF18	DDF15 DDF18	2	DRB15 X 18DP DT FD	DRB15 X 18DP SG
VAN54 BK BUTT	2 2	DR1221V DR1521V BUTT	2 1	DDF12 DDF30	DDF12 DDF30	2	DRB12 X 18DP DT FD	DRB12 X 18DP SG
VAN60 BK BUTT	2 2	DR1521V DR1521V BUTT	2 1	DDF15 DDF30	DDF15 DDF30	2	DRB15 X 18DP DT FD	DRB15 X 18DP SG
VANITY COMBO SINK BASE • 18" DEEP X 31 1/8" HIGH								
VSDB2418 BK	1	DR1221V	1 1 1	DDF12 DDF12VD DDF24	DDF12 DDF12D DDF24	1 1	DRB12 X 15DP DT FD DRB12M X 15DP DT FD	DRB12 X 15DP SG DRB12M X 15DP SG
VSDB2718 BK	1	DR1521V	1 1 1	DDF12 DDF12VD DDF27	DDF12 DDF12D DDF27	1 1	DRB12 X 15DP DT FD DRB12M X 15DP DT FD	DRB12 X 15DP SG DRB12M X 15DP SG
VSDB3018 BK	1	DR1821V	1 1 1	DDF12 DDF12VD DDF30	DDF12 DDF12D DDF30	1 1	DRB12 X 15DP DT FD DRB12M X 15DP DT FD	DRB12 X 15DP SG DRB12M X 15DP SG
VSDB3318 BK	1	DR2121V	1 1 1	DDF12 DDF12VD DDF33	DDF12 DDF12D DDF33	1 1	DRB12 X 15DP DT FD DRB12M X 15DP DT FD	DRB12 X 15DP SG DRB12M X 15DP SG
VSDB3618 BK	1	DR2121V	1 1 1	DDF15 DDF15VD DDF36	DDF15 DDF15D DDF36	1 1	DRB15 X 15DP DT FD DRB15M X 15DP DT FD	DRB15 X 15DP SG DRB15M X 15DP SG

SKU	Qty	DOOR Part Name	Qty	DRAWER FRONT/PANEL Full Overlay Part Name	DRAWER FRONT/PANEL Standard Overlay Part Name	Qty	ADJUSTABLE SHELF/ACCESSORY PORTFOLIO SELECT Part Name	ADJUSTABLE SHELF/ACCESSORY PORTFOLIO & VALUE BUILT Part Name
VANITY COMBO SINK BASE • 31 1/8" HIGH								
VSDB24 BK	1	DR1221V	1	DDF12	DDF12	1	DRB12 X 18DP DT FD	DRB12 X 18DP SG
			1	DDF12VD	DDF12D	1	DRB12M X 18DP DT FD	DRB12M X 18DP SG
			1	DDF24	DDF24			
VSDB27 BK	1	DR1521V	1	DDF12	DDF12	1	DRB12 X 18DP DT FD	DRB12 X 18DP SG
			1	DDF12VD	DDF12D	1	DRB12M X 18DP DT FD	DRB12M X 18DP SG
			1	DDF27	DDF27			
VSDB30 BK	1	DR1821V	1	DDF12	DDF12	1	DRB12 X 18DP DT FD	DRB12 X 18DP SG
			1	DDF12VD	DDF12D	1	DRB12M X 18DP DT FD	DRB12M X 18DP SG
			1	DDF30	DDF30			
VSDB33 BK	1	DR2121V	1	DDF12	DDF12	1	DRB12 X 18DP DT FD	DRB12 X 18DP SG
			1	DDF12VD	DDF12D	1	DRB12M X 18DP DT FD	DRB12M X 18DP SG
			1	DDF33	DDF33			
VSDB36 BK	1	DR2121V	1	DDF15	DDF15	1	DRB15 X 18DP DT FD	DRB15 X 18DP SG
			1	DDF15VD	DDF15D	1	DRB15M X 18DP DT FD	DRB15M X 18DP SG
			1	DDF36	DDF36			
VSDB42 BK BUTT	2	DR1521V BUTT	1	DDF30	DDF30	2	DRB12 X 18DP DT FD	DRB12 X 18DP SG
			2	DDF12	DDF12	1	DRB12M X 18DP DT FD	DRB12M X 18DP SG
			1	DDF12VD	DDF12D			
VSDB48D BK BUTT	2	DR1221V BUTT	1	DDF24	DDF24	4	DRB12 X 18DP DT FD	DRB12 X 18DP SG
			4	DDF12	DDF12	2	DRB12M X 18DP DT FD	DRB12M X 18DP SG
			2	DDF12VD	DDF12D			
VSDB54D BK BUTT	2	DR1221V BUTT	1	DDF24	DDF24	4	DRB15 X 18DP DT FD	DRB15 X 18DP SG
			4	DDF15	DDF15	2	DRB15M X 18DP DT FD	DRB15M X 18DP SG
			2	DDF15VD	DDF15D			
VSDB60C BK BUTT	4	DR1221V BUTT	2	DDF24	DDF24	2	DRB12 X 18DP DT FD	DRB12 X 18DP SG
			2	DDF12	DDF12	1	DRB12M X 18DP DT FD	DRB12M X 18DP SG
			1	DDF12VD	DDF12D			
VSDB60D BK BUTT	2	DR1521V BUTT	1	DDF30	DDF30	4	DRB15 X 18DP DT FD	DRB15 X 18DP SG
			4	DDF15	DDF15	2	DRB15M X 18DP DT FD	DRB15M X 18DP SG
			2	DDF15VD	DDF15D			
VANITY BASE • 34 1/2" HIGH								
VB1234H	1	DR1224	1	DDF12	DDF12	1	DRB12 X 18DP DT FD	DRB12 X 18DP SG
VB1534H	1	DR1524	1	DDF15	DDF15	1	DRB15 X 18DP DT FD	DRB15 X 18DP SG
VB1834H	1	DR1824	1	DDF18	DDF18	1	DRB18 X 18DP DT FD	DRB18 X 18DP SG
VB2134H	1	DR2124	1	DDF21	DDF21	1	DRB21 X 18DP DT FD	DRB21 X 18DP SG
VB2434H BUTT	2	DR1224 BUTT	1	DDF24	DDF24	1	DRB24 X 18DP DT FD	DRB24 X 18DP SG
VB2734H BUTT	2	DR1324 BUTT	1	DDF27	DDF27	1	DRB27 X 18DP DT FD	DRB27 X 18DP SG
VB3034H BUTT	2	DR1524 BUTT	1	DDF30	DDF30	1	DRB30 X 18DP DT FD	DRB30 X 18DP SG
VB3334H BUTT	2	DR1624 BUTT	1	DDF33	DDF33	1	DRB33 X 18DP DT FD	DRB33 X 18DP SG
VB3634H BUTT	2	DR1824 BUTT	1	DDF36	DDF36	1	DRB36 X 18DP DT FD	DRB36 X 18DP SG
VANITY BASE WITH BOTTOM MOUNT WASTEBASKET • 34 1/2" HIGH								
VWBB1834H	1	DR1824 ND	1	DDF18	DDF18	1 1	DRB18 X 18DP DT FD VWBB1834H _OL KIT	DRB18 X 18DP SG VWBB1834H _OL KIT
VANITY SINK BASE WITH TOP DRAWERS • 34 1/2" HIGH								
VAN3634H BUTT	2	DR1824 BUTT	3	DDF12	DDF12	2	DRB10 X 18DP DT FD	DRB10 X 18DP SG
VAN4234H	2	DR2124	2 1	DDF12 DDF18	DDF12 DDF18	2	DRB12 X 18DP DT FD	DRB12 X 18DP SG
VAN3934H	2	DR1924	2 1	DDF12 DDF15	DDF12 DDF15	2	DRB12 X 18DP DT FD	DRB12 X 18DP SG
VAN4834H	2 1	DR1524 DR1824	2 1	DDF15 DDF18	DDF15 DDF18	2	DRB15 X 18DP DT FD	DRB15 X 18DP SG
VAN5434H BK BUTT	2 2	DR1224 DR1524 BUTT	2 1	DDF12 DDF30	DDF12 DDF30	2	DRB12 X 18DP DT FD	DRB12 X 18DP SG
VAN6034H BK BUTT	2 2	DR1524 DR1524 BUTT	2 1	DDF15 DDF30	DDF15 DDF30	2	DRB15 X 18DP DT FD	DRB15 X 18DP SG

SKU	Qty	DOOR Part Name	Qty	DRAWER FRONT/PANEL Full Overlay Part Name	DRAWER FRONT/PANEL Standard Overlay Part Name	Qty	ADJUSTABLE SHELF/ACCESSORY PORTFOLIO SELECT Part Name	ADJUSTABLE SHELF/ACCESSORY PORTFOLIO & VALUE BUILT Part Name
VANITY COMBO SINK BASE • 18" DEEP X 34 1/2" HIGH								
VSDB241834H BK	1	DR1224	2	DDF12M	DDF12D	2	DRB12M X 15DP DT FD	DRB12M X 15DP SG
			1	DDF24	DDF24			
VSDB271834H BK	1	DR1524	2	DDF12M	DDF12D	2	DRB12M X 15DP DT FD	DRB12M X 15DP SG
			1	DDF27	DDF27			
VSDB301834H BK	1	DR1824	2	DDF12M	DDF12D	2	DRB12M X 15DP DT FD	DRB12M X 15DP SG
			1	DDF30	DDF30			
VSDB331834H BK	1	DR2124	2	DDF12M	DDF12D	2	DRB12M X 15DP DT FD	DRB12M X 15DP SG
			1	DDF33	DDF33			
VSDB361834H BK	1	DR2124	2	DDF15M	DDF15D	2	DRB15M X 15DP DT FD	DRB15M X 15DP SG
			1	DDF36	DDF36			
VANITY COMBO SINK BASE • 34 1/2" HIGH								
VSDB2434H BK	1	DR1224	2	DDF12M	DDF12D	2	DRB12M X 18DP DT FD	DRB12M X 18DP SG
			1	DDF24	DDF24			
VSDB2734H BK	1	DR1524	2	DDF12M	DDF12D	2	DRB12M X 18DP DT FD	DRB12M X 18DP SG
			1	DDF27	DDF27			
VSDB3034H BK	1	DR1824	2	DDF12M	DDF12D	2	DRB12M X 18DP DT FD	DRB12M X 18DP SG
			1	DDF30	DDF30			
VSDB3334H BK	1	DR2124	2	DDF12M	DDF12D	2	DRB12M X 18DP DT FD	DRB12M X 18DP SG
			1	DDF33	DDF33			
VSDB3634H BK	1	DR2124	2	DDF15M	DDF15D	2	DRB15M X 18DP DT FD	DRB15M X 18DP SG
			1	DDF36	DDF36			
VSDB3934H BK	1	DR2124	1	DDF21	DDF21	2	DRB18M X 18DP DT FD	DRB18M X 18DP SG
			1	DDF18	DDF18			
			2	DDF18M	DDF18D			
VSDB4234H BK BUTT	2	DR1524 BUTT	1	DDF30	DDF30	1	DRB12 X 18DP DT FD	DRB12 X 18DP SG
			1	DDF12	DDF12	2	DRB12M X 18DP DT FD	DRB12M X 18DP SG
			2	DDF12M	DDF12D			
VSDB4834HD BK BUTT	2	DR1224 BUTT	1	DDF24	DDF24	2	DRB12 X 18DP DT FD	DRB12 X 18DP SG
			2	DDF12	DDF12	4	DRB12M X 18DP DT FD	DRB12M X 18DP SG
			4	DDF12M	DDF12D			
VSDB5434HD BK BUTT	2	DR1224 BUTT	1	DDF24	DDF24	2	DRB15 X 18DP DT FD	DRB15 X 18DP SG
			2	DDF15	DDF15	4	DRB15M X 18DP DT FD	DRB15M X 18DP SG
			4	DDF15M	DDF15D			
VSDB6034HC BK BUTT	4	DR1224 BUTT	2	DDF24	DDF24	1	DRB12 X 18DP DT FD	DRB12 X 18DP SG
			1	DDF12	DDF12	2	DRB12M X 18DP DT FD	DRB12M X 18DP SG
			2	DDF12M	DDF12D			
VSDB6034HD BK BUTT	2	DR1524 BUTT	1	DDF30	DDF30	2	DRB15 X 18DP DT FD	DRB15 X 18DP SG
			2	DDF15	DDF15	4	DRB15M X 18DP DT FD	DRB15M X 18DP SG
			4	DDF15M	DDF15D			

SKU	Qty	DOOR Part Name	SPECIALTY DOOR Part Name	GLASS INSERT Part Name	Qty	ADJUSTABLE SHELF *For All Plywood Construction and/or Matching Interior Adjustable Shelf, refer to Parts Directory legend *Part Name
VANITY LINEN WITH ADJUSTABLE SHELVES						
VLC122184 AS	1 1	DR1230 DR1250	DR1230 SD	DGI-1230	5	S1221
VLC152184 AS	1 1	DR1530 DR1550	DR1530 SD	DGI-1530	5	S1521
VLC182184 AS	1 1	DR1830 DR1850	DR1830 SD	DGI-1830	5	S1821
VLC242184 AS BUTT	2 2	DR1230 BUTT DR1250 BUTT	DR1230 BUTT SD	DGI-1230 BUTT	5	S2421
VANITY LINEN WITH SLIDING SHELVES						
VLC122184 4SSK	1 1	DR1230 DR1250	DR1230 SD	DGI-1230	1 4	S1221 SSK1221
VLC152184 4SSK	1 1	DR1530 DR1550	DR1530 SD	DGI-1530	1 4	S1521 SSK1521
VLC182184 4SSK	1 1	DR1830 DR1850	DR1830 SD	DGI-1830	1 4	S1821 SSK1821
VLC242184 4SSK BUTT	2 2	DR1230 BUTT DR1250 BUTT	DR1230 BUTT SD	DGI-1230 BUTT	1 4	S2421 SSK2421
MEDICINE CABINET						
MC1530	1	DR1530	N/A	N/A	2	MC SHELF
MCM1530	1	DRMCM1530	N/A	N/A	2	MC SHELF
VALET CABINET						
VC2436 BUTT	2	DR1224 BUTT	N/A	N/A	-	N/A

SKU	Qty	DOORS Full Overlay Part Name	 Standard Overlay Part Name
VANITY FULL HEIGHT BASE - 34 1/2" HIGH			
VB1234H FH	1	DR12FH	DR1230
VB1534H FH	1	DR15FH	DR1530
VB1834H FH	1	DR18FH	DR1830
VB2434H BUTT FH	2	DR12BUTT FH	DR1230 BUTT
VB3034H BUTT FH	2	DR15BUTT FH	DR1530 BUTT
VB3634H BUTT FH	2	DR18BUTT FH	DR1830 BUTT

SKU	Qty	DOOR Part Name	Qty	DRAWER FRONT/PANEL Part Name
VANITY SINK BASE • 31 1/8" HIGH				
VSB15	1	DR1521V	1	DDF15
VSB18	1	DR1821V	1	DDF18
VSB21	1	DR2121V	1	DDF21
VSB24 BUTT	2	DR1221V BUTT	1	DDF24
VSB27 BUTT	2	DR1321V BUTT	1	DDF27
VSB30 BUTT	2	DR1521V BUTT	1	DDF30
VSB33 BUTT	2	DR1621V BUTT	1	DDF33
VSB36 BUTT	2	DR1821V BUTT	1	DDF36
VSB39	2	DR1921V	2	DDF19
VSB42	2	DR2121V	2	DDF21
VSB48	2 1	DR1521V DR1821V	2 1	DDF15 DDF18
VSB54 BUTT	4	DR1321V BUTT	2	DDF27
VSB60 BUTT	4	DR1521V BUTT	2	DDF30
VANITY SINK BASE • 18" DEEP X 31 1/8" HIGH				
VSB2418 BUTT	2	DR1221V BUTT	1	DDF24
VSB3018 BUTT	2	DR1521V BUTT	1	DDF30
VSB3618 BUTT	2	DR1821V BUTT	1	DDF36
VANITY SINK BASE • 34 1/2" HIGH				
VSB1534H	1	DR1524	1	DDF15
VSB1834H	1	DR1824	1	DDF18
VSB2134H	1	DR2124	1	DDF21
VSB2434H BUTT	2	DR1224 BUTT	1	DDF24
VSB2734H BUTT	2	DR1324 BUTT	1	DDF27
VSB3034H BUTT	2	DR1524 BUTT	1	DDF30
VSB3334H BUTT	2	DR1624 BUTT	1	DDF33
VSB3634H BUTT	2	DR1824 BUTT	1	DDF36
VSB3934H	2	DR1924	2	DDF19
VSB4234H	2	DR2124	2	DDF21
VSB4834H	2 1	DR1524 DR1824	2 1	DDF15 DDF18
VSB5434H BUTT	4	DR1324 BUTT	2	DDF27
VSB6034H BUTT	4	DR1524 BUTT	2	DDF30
VANITY SINK BASE • 18" DEEP X 34 1/2" HIGH				
VSB243418H BUTT	2	DR1224 BUTT	1	DDF24
VSB303418H BUTT	2	DR1524 BUTT	1	DDF30
VSB363418H BUTT	2	DR1824 BUTT	1	DDF36
VANITY SINK FRONT				
VSF21	1	DR2121V	1	DDF21
VSF24 BUTT	2	DR1221V BUTT	1	DDF24
VSF30 BUTT	2	DR1521V BUTT	1	DDF30
VSF36 BUTT	2	DR1821V BUTT	1	DDF36
VSF39	2	DR1921V	2	DDF19
VSF42	2	DR2121V	2	DDF21
VSF48	2 1	DR1521V DR1821V	2 1	DDF15 DDF18
VANITY PLUMBING SKIRT				
VPS30 UD	-	N/A	1	DDFKDC33/27
VPS36 UD	-	N/A	1	DDFKDC36/33

SKU	Qty	DRAWER FRONT		DRAWER BODY	
		Full Overlay	Standard Overlay	PORTFOLIO SELECT	PORTFOLIO & VALUE BUILT
		Part Name	Part Name	Part Name	Part Name
VANITY DRAWER BASE - 31 1/8" HIGH					
VDB12	2 1	DDF12 DDF12VD	DDF12 DDF12D	DRB12 X 18DP DT FD DRB12M X 18DP DT FD	DRB12 X 18DP SG DRB12M X 18DP SG
VDB15	2 1	DDF15 DDF15VD	DDF15 DDF15D	DRB15 X 18DP DT FD DRB15M X 18DP DT FD	DRB15 X 18DP SG DRB15M X 18DP SG
VDB18	2 1	DDF18 DDF18VD	DDF18 DDF18D	DRB18 X 18DP DT FD DRB18M X 18DP DT FD	DRB18 X 18DP SG DRB18M X 18DP SG
VDB21	2 1	DDF21 DDF21VD	DDF21 DDF21D	DRB21 X 18DP DT FD DRB21M X 18DP DT FD	DRB21 X 18DP SG DRB21M X 18DP SG
VDB24	2 1	DDF24 DDF24VD	DDF24 DDF24D	DRB24 X 18DP DT FD DRB24M X 18DP DT FD	DRB24 X 18DP SG DRB24M X 18DP SG
VANITY DRAWER BASE - 34 1/2" HIGH					
VDB1234H	1 2	DDF12 DDF12M	DDF12 DDF12D	DRB12 X 18DP DT FD DRB12M X 18DP DT FD	DRB12 X 18DP SG DRB12M X 18DP SG
VDB1534H	1 2	DDF15 DDF15M	DDF15 DDF15D	DRB15 X 18DP DT FD DRB15M X 18DP DT FD	DRB15 X 18DP SG DRB15M X 18DP SG
VDB1834H	1 2	DDF18 DDF18M	DDF18 DDF18D	DRB18 X 18DP DT FD DRB18M X 18DP DT FD	DRB18 X 18DP SG DRB18M X 18DP SG
VDB2134H	1 2	DDF21 DDF21M	DDF21 DDF21D	DRB21 X 18DP DT FD DRB21M X 18DP DT FD	DRB21 X 18DP SG DRB21M X 18DP SG
VDB2434H	1 2	DDF24 DDF24M	DDF24 DDF24D	DRB24 X 18DP DT FD DRB24M X 18DP DT FD	DRB24 X 18DP SG DRB24M X 18DP SG

SKU	Qty	DOOR Part Name	Qty	SHELF *For All Plywood Construction Adjustable Shelf, refer to Parts Directory legend	
				PORTFOLIO SELECT & PORTFOLIO	VALUE BUILT
				*Part Name	*Part Name
DESK DOOR - 21" DEEP					
DDO1221	1	DR1218	1	12" SHELF 21DP 3/4	VLC1221 SHELF ADJ
DDO1521	1	DR1518	1	15" SHELF 21DP 3/4	VLC1521 SHELF ADJ
DDO1821	1	DR1818	1	18" SHELF 21DP 3/4	VLC1821 SHELF ADJ
DDO2121	1	DR2118	1	21" SHELF 21DP 3/4	21" SHELF 21DP
DDO2421 BUTT	2	DR1218 BUTT	1	24" SHELF 21DP 3/4	24" SHELF 21DP
DESK DOOR - 24" DEEP					
DDO1224	1	DR1218	1	12" SHELF 24DP 3/4	12" SHELF 24DP
DDO1524	1	DR1518	1	15" SHELF 24DP 3/4	15" SHELF 24DP
DDO1824	1	DR1818	1	18" SHELF 24DP 3/4	18" SHELF 24DP
DDO2124	1	DR2118	1	21" SHELF 24DP 3/4	21" SHELF 24DP
DDO2424 BUTT	2	DR1218 BUTT	1	24" SHELF 24DP 3/4	24" SHELF 24DP

SKU	Qty	DRAWER FRONT Part Name	DRAWER BODY PORTFOLIO SELECT Part Name	PORTFOLIO Part Name	VALUE BUILT Part Name
DESK DOOR ▪ 21" DEEP					
DDO1221	1	DDF12	DRB12 X 18DP DT FD	DRB12 X 18DP SG	DRB12 X 18DP SG
DDO1521	1	DDF15	DRB15 X 18DP DT FD	DRB15 X 18DP SG	DRB15 X 18DP SG
DDO1821	1	DDF18	DRB18 X 18DP DT FD	DRB18 X 18DP SG	DRB18 X 18DP SG
DDO2121	1	DDF21	DRB21 X 18DP DT FD	DRB21 X 18DP SG	DRB21 X 18DP SG
DDO2421 BUTT	1	DDF24	DRB24 X 18DP DT FD	DRB24 X 18DP SG	DRB24 X 18DP SG
DESK DOOR ▪ 24" DEEP					
DDO1224	1	DDF12	DRB12 X 21DP DT FD	DRB12 X 21DP SG	DRB12 X 18DP SG
DDO1524	1	DDF15	DRB15 X 21DP DT FD	DRB15 X 21DP SG	DRB15 X 18DP SG
DDO1824	1	DDF18	DRB18 X 21DP DT FD	DRB18 X 21DP SG	DRB18 X 18DP SG
DDO2124	1	DDF21	DRB21 X 21DP DT FD	DRB21 X 21DP SG	DRB21 X 18DP SG
DDO2424 BUTT	1	DDF24	DRB24 X 21DP DT FD	DRB24 X 21DP SG	DRB24 X 18DP SG

SKU	Qty	DRAWER FRONT		DRAWER BODY / ACCESSORY		
		Full Overlay	Standard Overlay	PORTFOLIO SELECT	PORTFOLIO	VALUE BUILT
		Part Name	Part Name	Part Name	Part Name	Part Name
KNEEHOLE DRAWER CABINET						
KDC27/21	1	DDFKDC27/21	DDFKDC27/21	DRBKDC27X 15DP DT FD	DRBKDC27X 15DP DT SG	DRBKDC27X 15DP DT SG
KDC33/27	1	DDFKDC33/27	DDFKDC33/27	DRBKDC33X 15DP DT FD	DRBKDC33X 15DP DT SG	DRBKDC33X 15DP DT SG
KDC36/33	1	DDFKDC36/33	DDFKDC36/33	DRBKDC36X 15DP DT FD	DRBKDC36X 15DP DT SG	DRBKDC36X 15DP DT SG
DESK DRAWER BASE - 21" DEEP						
DDR1221	2 1	DDF12 DDF12M	DDF12 DDF12D	DRB12 X 18DP DT FD DRB12M X 18DP DT FD	DRB12 X 18DP SG DRB12M X 18DP SG	DRB12 X 18DP SG DRB12M X 18DP SG
DDR1521	2 1	DDF15 DDF15M	DDF15 DDF15D	DRB15 X 18DP DT FD DRB15M X 18DP DT FD	DRB15 X 18DP SG DRB15M X 18DP SG	DRB15 X 18DP SG DRB15M X 18DP SG
DDR1821	2 1	DDF18 DDF18M	DDF18 DDF18D	DRB18 X 18DP DT FD DRB18M X 18DP DT FD	DRB18 X 18DP SG DRB18M X 18DP SG	DRB18 X 18DP SG DRB18M X 18DP SG
DDR2121	2 1	DDF21 DDF21M	DDF21 DDF21D	DRB21 X 18DP DT FD DRB21M X 18DP DT FD	DRB21 X 18DP SG DRB21M X 18DP SG	DRB21 X 18DP SG DRB21M X 18DP SG
DDR2421	2 1	DDF24 DDF24M	DDF24 DDF24D	DRB24 X 18DP DT FD DRB24M X 18DP DT FD	DRB24 X 18DP SG DRB24M X 18DP SG	DRB24 X 18DP SG DRB24M X 18DP SG
DESK DRAWER BASE - 24" DEEP						
DDR1224	2 1	DDF12 DDF12M	DDF12 DDF12D	DRB12 X 21DP DT FD DRB12M X 21DP DT FD	DRB12 X 21DP SG DRB12M X 21DP SG	DRB12 X 18DP SG DRB12M X 18DP SG
DDR1524	2 1	DDF15 DDF15M	DDF15 DDF15D	DRB15 X 21DP DT FD DRB15M X 21DP DT FD	DRB15 X 21DP SG DRB15M X 21DP SG	DRB15 X 18DP SG DRB15M X 18DP SG
DDR1824	2 1	DDF18 DDF18M	DDF18 DDF18D	DRB18 X 21DP DT FD DRB18M X 21DP DT FD	DRB18 X 21DP SG DRB18M X 21DP SG	DRB18 X 18DP SG DRB18M X 18DP SG
DDR2124	2 1	DDF21 DDF21M	DDF21 DDF21D	DRB21 X 21DP DT FD DRB21M X 21DP DT FD	DRB21 X 21DP SG DRB21M X 21DP SG	DRB21 X 18DP SG DRB21M X 18DP SG
DDR2424	2 1	DDF24 DDF24M	DDF24 DDF24D	DRB24 X 21DP DT FD DRB24M X 21DP DT FD	DRB24 X 21DP SG DRB24M X 21DP SG	DRB24 X 18DP SG DRB24M X 18DP SG
DESK FILE PULL OUT CABINET						
DFDC1821	1 1	DDF18 DR1818	DDF18 DR1818	DRB18 X 18DP DT FD DFDC FILE UNIT 21	DRB18 X 18DP DT FD DFDC FILE UNIT 21	DRB18 X 18DP SG DFDC FILE UNIT 21
DFDC1824	1 1	DDF18 DR1818	DDF18 DR1818	DRB18 X 21DP DT FD DFDC FILE UNIT 24	DRB18 X 21DP DT FD DFDC FILE UNIT 24	DRB18 X 18DP SG DFDC FILE UNIT 24
FULL-HEIGHT DESK WITH BOTTOM MOUNT WASTEBASKET(S)						
DWBB1821	1	DR1824 ND	DR1824 ND	DWBB1821 _OL KIT	DWBB1821 _OL KIT	DWBB1821 _OL KIT
DWBB1824	1	DR1824 ND	DR1824 ND	DWBB1824 _OL KIT	DWBB1824 _OL KIT	DWBB1824 _OL KIT

Notes

DOORS Specialty Doors, Solid Doors & ND Doors are the same dimension		
Part Name	Full Overlay	Standard Overlay
50" High		
DR1250	11 9/16" x 49 1/4"	9 7/8" x 47 3/4"
DR1250 BUTT	11 11/16" x 49 1/4"	10 15/16" x 47 3/4"
DR1350 BUTT	13 3/16" x 49 1/4"	12 7/16" x 47 3/4"
DR1550	14 9/16" x 49 1/4"	12 7/8" x 47 3/4"
DR1550 BUTT	14 11/16" x 49 1/4"	13 15/16" x 47 3/4"
DR1650 BUTT	16 3/16" x 49 1/4"	15 7/16" x 47 3/4"
DR1850	17 9/16" x 49 1/4"	15 7/8" x 47 3/4"
DR1850 BUTT	17 11/16" x 49 1/4"	16 15/16" x 47 3/4"
DR2150	20 9/16" x 49 1/4"	18 7/8" x 47 3/4"
42" High		
DR942	8 9/16" x 41 1/2"	6 7/8" x 40"
DR1242	11 9/16" x 41 1/2"	9 7/8" x 40"
DR1242 BUTT	11 11/16" x 41 1/2"	10 15/16" x 40"
DR1242 WER DRILL	10 3/4" x 41 1/2"	10" x 40"
DR1242 WER ND	10 3/4" x 41 1/2"	10" x 40"
DR1342 BUTT	13 3/16" x 41 1/2"	12 7/16" x 40"
DR1542	14 9/16" x 41 1/2"	12 7/8" x 40"
DR1542 BUTT	14 11/16" x 41 1/2"	13 15/16" x 40"
DR1642 BUTT	16 3/16" x 41 1/2"	15 7/16" x 40"
DR1842	17 9/16" x 41 1/2"	15 7/8" x 40"
DR1842 BUTT	17 11/16" x 41 1/2"	16 15/16" x 40"
DR1942	19 1/16" x 41 1/2"	17 3/8" x 40"
DR2142	20 9/16" x 41 1/2"	18 7/8" x 40"
39" High		
DR939	8 9/16" x 38 1/2"	6 7/8" x 37"
DR1239	11 9/16" x 38 1/2"	9 7/8" x 37"
DR1239 BUTT	11 11/16" x 38 1/2"	10 15/16" x 37"
DR1239 WER DRILL	10 3/4" x 38 1/2"	10" x 37"
DR1239 WER ND	10 3/4" x 38 1/2"	10" x 37"
DR1339 BUTT	13 3/16" x 38 1/2"	12 7/16" x 37"
DR1539	14 9/16" x 38 1/2"	12 7/8" x 37"
DR1539 BUTT	14 11/16" x 38 1/2"	13 15/16" x 37"
DR1639 BUTT	16 3/16" x 38 1/2"	15 7/16"" x 37"
DR1839	17 9/16" x 38 1/2"	15 7/8" x 37"
DR1839 BUTT	17 11/16" x 38 1/2"	16 15/16" x 37"
DR2139	20 9/16" x 38 1/2"	18 7/8" x 37"
36" High		
DR936	8 9/16" x 35 1/2"	6 7/8" x 34"
DR1236	11 9/16" x 35 1/2"	9 7/8" x 34"
DR1236 BUTT	11 11/16" x 35 1/2"	10 15/16" x 34"
DR1236 WER DRILL	10 3/4" x 35 1/2"	10" x 34"
DR1236 WER ND	10 3/4" x 35 1/2"	10" x 34"
DR1336 BUTT	13 3/16" x 35 1/2"	12 7/16" x 34"
DR1536	14 9/16" x 35 1/2"	12 7/8" x 34"
DR1536 BUTT	14 11/16" x 35 1/2"	13 15/16" x 34"
DR1636 BUTT	16 3/16" x 35 1/2"	15 7/16" x 34"
DR1836	17 9/16" x 35 1/2"	15 7/8" x 34"
DR1836 BUTT	17 11/16" x 35 1/2"	16 15/16" x 34"
DR1936	19 1/16" x 35 1/2"	17 3/8" x 34"
DR2136	20 9/16" x 35 1/2"	18 7/8" x 34"

DOORS Specialty Doors, Solid Doors & ND Doors are the same dimension		
Part Name	Full Overlay	Standard Overlay
30" High		
DR930	8 9/16" x 29 1/2"	6 7/8" x 28"
DR930 BER DRILL	7 3/4" x 29 7/8"	7" x 28"
DR930 BER ND	7 3/4" x 29 7/8"	7" x 28"
DR1230	11 9/16" x 29 1/2"	9 7/8" x 28"
DR1230 BUTT	11 11/16" x 29 1/2"	10 15/16" x 28"
DR1230 BER DRILL	10 3/4" x 29 7/8"	10" x 28"
DR1230 BER ND	10 3/4" x 29 7/8"	10" x 28"
DR1230 WER DRILL	10 3/4" x 29 1/2"	10" x 28"
DR1230 WER ND	10 3/4" x 29 1/2"	10" x 28"
DR1330 BUTT	13 3/16" x 29 1/2"	12 7/16" x 28"
DR1530	14 9/16" x 29 1/2"	12 7/8" x 28"
DR1530 BUTT	14 11/16" x 29 1/2"	13 15/16" x 28"
DR1630 BUTT	16 3/16" x 29 1/2"	15 7/16" x 28"
DR1830	17 9/16" x 29 1/2"	15 7/8" x 28"
DR1830 BUTT	17 11/16" x 29 1/2"	16 15/16" x 28"
DR1930	19 1/16" x 29 1/2"	17 3/8" x 28"
DR2130	20 9/16" x 29 1/2"	18 7/8" x 28"
DR2430	23 9/16" x 29 1/2"	21 7/8" x 28"
27" High		
DR1327 BUTT	13 3/16" x 26 1/2"	12 7/16" x 25"
DR1527 BUTT	14 11/16" x 26 1/2"	13 15/16" x 25"
DR1627 BUTT	16 3/16" x 26 1/2"	15 7/16" x 25"
24" High		
DR1224	11 9/16" x 23 7/8"	9 7/8" x 22 3/8"
DR1224 BUTT	11 11/16" x 23 7/8"	10 15/16" x 22 3/8"
DR1324 BUTT	13 3/16" x 23 7/8"	12 7/16" x 22 3/8"
DR1524	14 9/16" x 23 7/8"	12 7/8" x 22 3/8"
DR1524 BUTT	14 11/16" x 23 7/8"	13 15/16" x 22 3/8"
DR1624 BUTT	16 3/16" x 23 7/8"	15 7/16" x 22 3/8"
DR1824	17 9/16" x 23 7/8"	15 7/8" x 22 3/8"
DR1824 BUTT	17 11/16" x 23 7/8"	16 15/16" x 22 3/8"
DR18.524 BUTT	18 3/16" x 23 7/8"	17 3/8" x 22 3/8"
DR1924	19 1/16" x 23 7/8"	17 3/8" x 22 3/8"
DR2124	20 9/16" x 23 7/8"	18 7/8" x 22 3/8"
DR2424	23 9/16" x 23 7/8"	21 7/8" x 22 3/8"
21" High		
DR1221V	11 9/16" x 20"	9 7/8" x 18 1/2"
DR1221V BUTT	11 11/16" x 20"	10 15/16" x 18 1/2"
DR1321V BUTT	13 3/16" x 20"	12 7/16" x 18 1/2"
DR1521 BUTT	14 11/16" x 20"	13 15/16" x 18 1/2"
DR1521V	14 9/16" x 20"	12 7/8" x 18 1/2"
DR1521V BUTT	14 11/16" x 20"	13 15/16" x 18 1/2"
DR1621 BUTT	16 3/16" x 20"	15 7/16" x 18 1/2"
DR1621V BUTT	16 3/16" x 20"	15 7/16" x 18 1/2"
DR1821 BUTT	17 11/16" x 20"	16 15/16" x 18 1/2"
DR1821V	17 9/16" x 20"	15 7/8" x 18 1/2"
DR1821V BUTT	17 11/16" x 20"	16 15/16" x 18 1/2"
DR18.521 BUTT	18 3/16"x 20"	17 3/8" x 18 1/2"
DR1921	19 1/16" x 20"	17 3/8" x 18 1/2"
DR1921V	19 1/16" x 20"	17 3/8" x 18 1/2"
DR2121V	20 9/16" x 20"	18 7/8" x 18 1/2"

DOORS Specialty Doors, Solid Doors & ND Doors are the same dimension		
Part Name	Full Overlay	Standard Overlay
18" High		
DR1218	11 9/16" x 17 1/2"	9 7/8" x 16"
DR1218 BUTT	11 11/16" x 17 1/2"	10 15/16" x 16"
DR1318 BUTT	13 3/16" x 17 1/2"	12 7/16" x 16"
DR1518	14 9/16" x 17 1/2"	12 7/8" x 16"
DR1518 BUTT	14 11/16" x 17 1/2"	13 15/16" x 16"
DR1618 BUTT	16 3/16" x 17 1/2"	15 7/16" x 16"
DR1818	17 9/16" x 17 1/2"	15 7/8" x 16"
DR1818 BUTT	17 11/16" x 17 1/2"	16 15/16" x 16"
DR18.518 BUTT	18 3/16"x 17 1/2"	17 3/8" x 16"
DR1918	19 1/16" x 17 1/2"	17 3/8" x 16"
DR2118	20 9/16" x 17 1/2"	18 7/8" x 16"
DR3018 WTH	29 1/2" x 17 9/16"	28" x 15 7/8"
DR3618 WTH	35 1/2" x 17 9/16"	34" x 15 7/8"
15" High		
DR1215	11 9/16"x 14 1/2"	9 7/8" x 13"
DR1215 BUTT	11 11/16" x 14 1/2"	10 15/16"x 13"
DR1315 BUTT	13 3/16" x 14 1/2"	12 7/16" x 13"
DR1515	14 9/16" x 14 1/2"	12 7/8" x 13"
DR1515 BUTT	14 11/16" x 14 1/2"	13 15/16" x 13"
DR1615 BUTT	16 3/16" x 14 1/2"	15 7/16" x 13"
DR1815	17 9/16" x 14 1/2"	15 7/8" x 13"
DR1815 BUTT	17 11/16" x 14 1/2"	16 15/16" x 13"
DR18.515 BUTT	18 3/16" x 14 1/2"	17 3/8" x 13"
DR1915	19 1/16" x 14 1/2"	17 3/8" x 13"
DR2115	20 9/16" x 14 1/2"	18 7/8" x 13"
DR3015 WTH	29 1/2" x 14 9/16"	28" x 12 7/8"
DR3615 WTH	35 1/2" x 14 9/16"	34" x 12 7/8"
12" High		
DR1212	11 9/16" x 11 1/2"	9 7/8" x 10"
DR1212 BUTT	11 11/16" x 11 1/2"	9 7/8" x 10"
DR1312 BUTT	13 3/16" x 11 1/2"	12 7/16" x 10"
DR1512	14 9/16" x 11 1/2"	12 7/8" x 10"
DR1512 BUTT	14 11/16" x 11 1/2"	13 15/16" x 10"
DR1612 BUTT	16 3/16" x 11 1/2"	15 7/16" x 10"
DR1812	17 9/16" x 11 1/2"	15 7/8" x 10"
DR1812 BUTT	17 11/16" x 11 1/2"	16 15/16" x 10"
DR18.512 BUTT	18 3/16"x 11 1/2"	17 3/8" x 10"
DR1912	19 1/16" x 11 1/2"	17 3/8" x 10"
DR2112	20 9/16" x 11 1/2"	18 7/8" x 10"
DR4212 WTH	41 1/2" x 11 9/16"	40" x 9 7/8"
Miscellaneous Doors		
DRMCM1530	14 9/16" x 29 1/2"	12 7/8" x 28"
MIRROR TV3030	8 13/16" x 26 1/2"	8 13/16" x 26 1/2"
MIRROR TV3630	10 13/16" x 26 1/2"	10 13/16" x 26 1/2"

DOORS Specialty Doors, Solid Doors & ND Doors are the same dimension		
Part Name	Full Overlay	Standard Overlay
Full-Height Doors		
DR9FH	8 9/16" x 29 7/8"	-
DR12FH	11 9/16" x 29 7/8"	-
DR12BUTT FH	11 11/16" x 29 7/8"	-
DR13BUTT FH	13 3/16" x 29 7/8"	-
DR15FH	14 9/16" x 29 7/8"	-
DR15BUTT FH	14 11/16" x 29 7/8"	-
DR16BUTT FH	16 3/16" x 29 7/8"	-
DR18FH	17 9/16" x 29 7/8"	-
DR18BUTT FH	17 11/16" x 29 7/8"	-
DR21FH	20 9/16" x 29 7/8"	-
DR24FH	23 9/16" x 29 7/8"	-
DRCBS36	14 9/16" x 29 7/8"	12 7/8" x 28"
Decorator Doors		
DMDB	23 9/16" x 29 7/8"	21 7/8" x 28"
DMDBEA12	11 9/16" x 29 7/8"	9 7/8" x 28"
DMDD21	20 9/16" x 23 7/8"	18 7/8" x 22 3/8"
DMDD24	23 9/16" x 23 7/8"	21 7/8" x 22 3/8"
DMDW18	11 9/16" x 17 1/2"	9 7/8" x 16"
DMDW24	11 9/16" x 23 7/8"	9 7/8" x 22 3/8"
DMDW30	11 9/16" x 29 1/2"	9 7/8" x 28"
DMDW36	11 9/16" x 35 1/2"	9 7/8" x 34"
DMDW39	11 9/16" x 38 1/2"	9 7/8" x 37"
DMDW42	11 9/16" x 41 1/2"	9 7/8" x 40"
DMDV	20 9/16" x 20" 20 9/16" x 5 13/16"	18 7/8" x 17 7/8" 18 7/8" x 5 1/8"
DMDT8412	11 9/16" x 29 1/2" 11 9/16" x 49 1/4"	9 7/8" x 28" 9 7/8" x 47 3/4"
DMDT8424	11 9/16" x 29 1/2" 11 9/16" x 49 1/4"	9 7/8" x 28" 9 7/8" x 47 3/4"
DMDT9012	11 9/16" x 35 1/2" 11 9/16" x 49 1/4"	9 7/8" x 34" 9 7/8" x 47 3/4"
DMDT9024	11 9/16" x 35 1/2" 11 9/16" x 49 1/4"	9 7/8" x 34" 9 7/8" x 47 3/4"
DMDT9312	11 9/16" x 38 1/2" 11 9/16" x 49 1/4"	9 7/8" x 37" 9 7/8" x 47 3/4"
DMDT9324	11 9/16" x 38 1/2" 11 9/16" x 49 1/4"	9 7/8" x 37" 9 7/8" x 47 3/4"
DMDT9612	11 9/16" x 41 1/2" 11 9/16" x 49 1/4"	9 7/8" x 40" 9 7/8" x 47 3/4"
DMDT9624	11 9/16" x 41 1/2" 11 9/16" x 49 1/4"	9 7/8" x 40" 9 7/8" x 47 3/4"

SHELVES	
Part Name	Dimensions
3/4" Shelves	
9" SHELF 3/4	7 1/4" x 10 1/4" x 3/4"
12" SHELF 3/4	10 1/4" x 10 1/4" x 3/4"
15" SHELF 3/4	13 1/4" x 10 1/4" x 3/4"
18" SHELF 3/4	16 1/4" x 10 1/4" x 3/4"
21" SHELF 3/4	19 1/4" x 10 1/4" x 3/4"
24" SHELF 3/4	22 1/4" x 10 1/4" x 3/4"
27" SHELF 3/4	25 1/4" x 10 1/4" x 3/4"
30" SHELF 3/4	28 1/4" x 10 1/4" x 3/4"
33" SHELF 3/4	31 1/4" x 10 1/4" x 3/4"
36" SHELF 3/4	34 1/4" x 10 1/4" x 3/4"
39" SHELF 3/4	37 1/4" x 10 1/4" x 3/4"
42" SHELF 3/4	40 1/4" x 10 1/4" x 3/4"
45" SHELF 3/4	43 1/4" x 10 1/4" x 3/4"
48" SHELF 3/4	46 1/4" x 10 1/4" x 3/4"
12" SHELF PB 3/4	10 3/16" x 22 1/8" x 3/4"
18" SHELF PB 3/4	16 3/16" x 22 1/8" x 3/4"
24" SHELF PB 3/4	22 3/16" x 22 1/8" x 3/4"
24" SHELF PB 3/4	22 3/16" x 22 1/8" x 3/4"
30" SHELF PB 3/4	28 3/16" x 22 1/8" x 3/4"
36" SHELF PB 3/4	34 3/16" x 22 1/8" x 3/4"
42" SHELF PB 3/4	40 3/16" x 22 1/8" x 3/4"
9" SHELF 24DP 3/4	7 3/16" x 22 3/16" x 3/4"
12" SHELF 24DP 3/4	10 3/16" x 22 1/8" x 3/4"
15" SHELF 24DP 3/4	13 3/16" x 22 1/8" x 3/4"
18" SHELF 24DP 3/4	16 3/16" x 22 1/8" x 3/4"
21" SHELF 24DP 3/4	19 3/16" x 22 1/8" x 3/4"
24" SHELF 24DP 3/4	22 3/16" x 22 1/8" x 3/4"
27" SHELF 24DP 3/4	25 1/4" x 22 1/8" x 3/4"
30" SHELF 24DP 3/4	28 1/4" x 22 1/8"' x 3/4"
33" SHELF 24DP 3/4	31 1/4" x 22 1/8"' x 3/4"
36" SHELF 24DP 3/4	34 1/4" x 22 1/8"' x 3/4"
37" SHELF 24DP 3/4	35 3/16" x 22 1/8"' x 3/4"
39" SHELF 24DP 3/4	37 1/4" x 22 1/8"' x 3/4"
42" SHELF 24DP 3/4	40 1/4" x 22 1/8"' x 3/4"
45" SHELF 24DP 3/4	43 1/4" x 22 1/8"' x 3/4"
48" SHELF 24DP 3/4	46 1/4" x 22 1/8"' x 3/4"
S1212	10 1/4" x 10 1/4" x 3/4"
S1512	13 1/4" x 10 1/4" x 3/4"
S1812	16 1/4" x 10 1/4" x 3/4"
S2112	19 1/4" x 10 1/4" x 3/4"
S2412	22 1/4" x 10 1/4" x 3/4"
S3612	34 3/16" x 10 1/4" x 3/4"
S1221	10 3/16" x 18 7/8" x 3/4"
S1521	13 3/16" x 18 7/8" x 3/4"
S1821	16 3/16" x 18 7/8" x 3/4"
S2421	22 3/16" x 18 7/8" x 3/4"
S924	7 3/16" x 22 1/8" x 3/4"
S1224	10 3/16" x 22 1/8" x 3/4"
S1524	13 3/16" x 22 1/8" x 3/4"
S1824	16 3/16" x 22 1/8" x 3/4"
S2124	19 1/4" x 22 1/8" x 3/4"
S2424	22 3/16" x 22 1/8" x 3/4"
S2724	25 3/16" x 22 1/8" x 3/4"
S3024	28 3/16" x 22 1/8" x 3/4"
S3324	31 3/16" x 22 1/8" x 3/4"
S3624	34 3/16" x 22 1/8" x 3/4"
S2724	25 3/16" x 22 1/8" x 3/4"
S3024	28 3/16" x 22 1/8" x 3/4"
S3324	31 3/16" x 22 1/8" x 3/4"
S3624	34 3/16" x 22 1/8" x 3/4"

SHELVES	
Part Name	Dimensions
1/2" Shelves	
9" SHELF	7 1/4" x 10 1/4" x 1/2"
12" SHELF	10 1/4" x 10 1/4" x 1/2"
15" SHELF	13 1/4" x 10 1/4" x 1/2"
18" SHELF	16 1/4" x 10 1/4" x 1/2"
21" SHELF	19 1/4" x 10 1/4" x 1/2"
24" SHELF	22 1/4" x 10 1/4" x 1/2"
27" SHELF ADJ	25 1/4" x 10 1/4" x 1/2"
30" SHELF ADJ	28 1/4" x 10 1/4" x 1/2"
33" SHELF ADJ	31 1/4" x 10 1/4" x 1/2"
36" SHELF ADJ	34 1/4" x 10 1/4" x 1/2"
39" SHELF ADJ	37 1/4" x 10 1/4" x 1/2"
42" SHELF ADJ	40 1/4" x 10 1/4" x 1/2"
45" SHELF ADJ	43 1/4" x 10 1/4" x 1/2"
48" SHELF ADJ	46 1/4" x 10 1/4" x 1/2"
Miscellaneous Shelves	
BS18 SHELF _PK	16 1/4" x 10 1/4" x 23/32"
BS24 SHELF _PK	22 1/4" x 10 1/4" x 23/32"
BS30 SHELF_PK	28 1/4" x 10 1/4" x 23/32"
BS36 SHELF _PK	34 1/4" x 10 1/4" x 23/32"
TV30 SHELF 9	8 7/8" x 3" x 1/2"
TV30 SHELF 18	17 9/32" x 3" x 1/2"
TV36 SHELF 11	10 7/8" x 3" x 1/2"
TV36 SHELF 22	21 9/32" x 3" x 1/2"
WMSC2718 TOP SHELF	25 1/4" x 16 1/4" x 3/4"

SLIDING ACCESSORIES		
Part Name	Dimensions	Upgraded CCSS Dimensions
Sliding Shelves		
SSK12	8 1/2" x 21 3/16" x 2"	7 3/4" x 21" x 3 1/2"
SSK15	11 1/2" x 21 3/16" x 2"	10 3/4" x 21" x 3 1/2"
SSK18	14 1/2" x 21 3/16" x 2"	13 3/4" x 21" x 3 1/2"
SSK19	16" x 21 3/16" x 2"	15 1/4" x 21" x 3 1/2"
SSK21	17 1/2" x 21 3/16" x 2"	16 3/4" x 21" x 3 1/2"
SSK24	20 1/2" x 21 3/16" x 2"	19 3/4" x 21" x 3 1/2"
SSK27	23 1/2" x 21 3/16" x 2"	22 3/4" x 21" x 3 1/2"
SSK30	26 1/2" x 21 3/16" x 2"	25 3/4" x 21" x 3 1/2"
SSK33	29 1/2" x 21 3/16" x 2"	28 3/4" x 21" x 3 1/2"
SSK36	32 1/2" x 21 3/16" x 2"	31 3/4" x 21" x 3 1/2"
SSK1221	8 1/2" x 18 3/16" x 2"	7 3/4" x 18" x 3 1/2"
SSK1521	11 1/2" x 18 3/16" x 2"	10 3/4" x 18" x 3 1/2"
SSK1821	14 1/2" x 18 3/16" x 2"	13 3/4" x 18" x 3 1/2"
SSK2421	20 1/2" x 18 3/16" x 2"	19 3/4" x 18" x 3 1/2"
Base Pot & Pan Organizers		
BPPOKCC24	19 3/4" x 19" x 21"	19 3/4" x 19" x 21"
BPPOKCC27	22 3/4" x 19" x 21"	22 3/4" x 19" x 21"
BPPOKCC30	25 3/4" x 19" x 21"	25 3/4" x 19" x 21"
BPPOKCC33	28 3/4" x 19" x 21"	28 3/4" x 19" x 21"
BPPOKCC36	31 3/4" x 19" x 21"	31 3/4" x 19" x 21"
Roll-Out Tray Dividers		
ROTDKCC12	7 3/4" x 21"	7 3/4" x 21"
ROTDKCC15	10 3/4" x 21	10 3/4" x 21"

DRAWER FRONTS		
Part Name	**Full Overlay**	**Standard Overlay**
Standard Drawer Front		
DDF12	11 9/16" x 5 13/16"	9 7/8" x 5 1/8"
DDF15	14 9/16" x 5 13/16"	12 7/8" x 5 1/8"
DDF18	17 9/16" x 5 13/16"	15 7/8" x 5 1/8"
DDF19	19 1/16" x 5 13/16"	17 3/8" x 5 1/8"
DDF21	20 9/16" x 5 13/16"	18 7/8" x 5 1/8"
DDF24	23 9/16" x 5 13/16"	21 7/8" x 5 1/8"
DDF27	26 9/16" x 5 13/16"	24 7/8" x 5 1/8"
DDF30	29 9/16" x 5 13/16"	27 7/8" x 5 1/8"
DDF33	32 9/16" x 5 13/16"	30 7/8" x 5 1/8"
DDF36	35 9/16" x 5 13/16"	33 7/8" x 5 1/8"
DDF18 DRILL	17 9/16" x 5 13/16"	15 7/8" x 5 1/8"
DDF19 DRILL	19 1/16" x 5 13/16"	17 3/8" x 5 1/8"
DDF21 DRILL	20 9/16" x 5 13/16"	18 7/8" x 5 1/8"
DDF24 DRILL	23 9/16" x 5 13/16"	21 7/8" x 5 1/8"
DDF27 DRILL	26 9/16" x 5 13/16"	24 7/8" x 5 1/8"
DDF30 DRILL	29 9/16" x 5 13/16"	27 7/8" x 5 1/8"
DDF33 DRILL	32 9/16" x 5 13/16"	30 7/8" x 5 1/8"
DDF36 DRILL	35 9/16" x 5 13/16"	33 7/8" x 5 1/8"
DDFOV27	26 9/16" x 7 7/16"	-
DDFOV30	29 9/16" x 7 7/16"	-
DDFOV33	32 9/16" x 7 7/16"	-
Large Drawer Front		
DDF12D	–	9 7/8" x 10 13/16"
DDF12M	11 9/16" x 11 27/32"	–
DDF12VD	11 9/16" x 13 3/8"	–
DDF15D	–	12 7/8" x 10 13/16"
DDF15M	14 9/16" x 11 27/32"	–
DDF15VD	14 9/16" x 13 3/8"	–
DDF18D	–	15 7/8" x 10 13/16"
DDF18M	17 9/16" x 11 27/32"	–
DDF18VD	17 9/16" x 13 3/8"	–
DDF21D	–	18 7/8" x 10 13/16"
DDF21M	20 9/16" x 11 27/32"	–
DDF21VD	20 9/16" x 13 3/8"	–
DDF24D	–	21 7/8" x 10 13/16"
DDF24M	23 9/16" x 11 27/32"	–
DDF24VD	23 9/16" x 13 3/8"	–
DDF27D	–	24 7/8" x 10 13/16"
DDF27M	26 9/16" x 11 27/32"	–
DDF30D	–	27 7/8" x 10 13/16"
DDF30M	29 9/16" x 11 27/32"	–
DDF33D	–	30 7/8" x 10 13/16"
DDF33M	32 9/16" x 11 27/32"	–
DDF36D	–	33 7/8" x 10 13/16"
DDF36M	35 9/16" x 11 27/32"	–
2DB Drawer Front		
DDF21 2DB	20 9/16" x 14 27/32"	18 7/8" x 13 13/16"
DDF24 2DB	23 9/16" x 14 27/32"	21 7/8" x 13 13/16"
DDF27 2DB	26 9/16" x 14 27/32"	24 7/8" x 13 13/16"
DDF30 2DB	29 9/16" x 14 27/32"	27 7/8" x 13 13/16"
DDF33 2DB	31 9/16" x 14 27/32"	30 7/8" x 13 13/16"
DDF36 2DB	35 9/16" x 14 27/32"	33 7/8" x 13 13/16"
Miscellaneous Drawer Front		
DDFKDC27/21	20 9/16" x 4 7/16"	18 7/8" x 3 3/4"
DDFKDC33/27	26 9/16" x 4 7/16"	24 7/8" x 3 3/4"
DDFKDC36/33	32 9/16" x 4 7/16"	30 7/8" x 3 3/4"
DDF SDC	5 11/16" x 5 1/2" x 1/2"	5 11/16" x 5 1/2" x 1/2"

DRAWER BODIES	
Part Name	Dimensions
Standard "SG" Drawer Bodies	
21" Deep	
DRB12 X 21DP SG	7 23/32" x 3 5/8" x 21"
DRB15 X 21DP SG	10 23/32" x 3 5/8" x 21"
DRB18 X 21DP SG	13 23/32" x 3 5/8" x 21"
DRB19 X 21DP SG	15 7/32" x 3 5/8" x 21"
DRB21 X 21DP SG	16 23/32" x 3 5/8" x 21"
DRB24 X 21DP SG	19 23/32" x 3 5/8" x 21"
DRB27 X 21DP SG	22 23/32" x 3 5/8" x 21"
DRB30 X 21DP SG	25 23/32" x 3 5/8" x 21"
DRB33 X 21DP SG	28 23/32" x 3 5/8" x 21"
DRB36 X 21DP SG	31 23/32" x 3 5/8" x 21"
18" Deep	
DRB12 X 18DP SG	7 23/32" x 3 5/8" x 18"
DRB15 X 18DP SG	10 23/32" x 3 5/8" x 18"
DRB18 X 18DP SG	13 23/32" x 3 5/8" x 18"
DRB19 X 18DP SG	15 7/32" x 3 5/8" x 18"
DRB21 X 18DP SG	16 23/32" x 3 5/8" x 18"
DRB24 X 18DP SG	19 23/32" x 3 5/8" x 18"
DRB27 X 18DP SG	22 23/32" x 3 5/8" x 18"
DRB30 X 18DP SG	25 23/32" x 3 5/8" x 18"
DRB33 X 18DP SG	28 23/32" x 3 5/8" x 18"
DRB36 X 18DP SG	31 23/32" x 3 5/8" x 18"
15" Deep	
DRB12 X 15DP SG	7 23/32" x 3 5/8" x 15"
DRB15 X 15DP SG	10 23/32" x 3 5/8" x 15"
DRB18 X 15DP SG	13 23/32" x 3 5/8" x 15"
DRB19 X 15DP SG	15 7/32" x 3 5/8" x 15"
DRB21 X 15DP SG	16 23/32" x 3 5/8" x 15"
DRB24 X 15DP SG	19 23/32" x 3 5/8" x 15"
DRB27 X 15DP SG	22 23/32" x 3 5/8" x 15"
DRB30 X 15DP SG	25 23/32" x 3 5/8" x 15"
DRB33 X 15DP SG	28 23/32" x 3 5/8" x 15"
DRB36 X 15DP SG	31 23/32" x 3 5/8" x 15"
12" Deep	
DRB12 X 12DP SG	7 23/32" x 3 5/8" x 12"
DRB15 X 12DP SG	10 23/32" x 3 5/8" x 12"
DRB18 X 12DP SG	13 23/32" x 3 5/8" x 12"
DRB19 X 12DP SG	12 7/32" x 3 5/8" x 12"
DRB21 X 12DP SG	16 23/32" x 3 5/8" x 12"
DRB24 X 12DP SG	19 23/32" x 3 5/8" x 12"
DRB27 X 12DP SG	22 23/32" x 3 5/8" x 12"
DRB30 X 12DP SG	25 23/32" x 3 5/8" x 12"
DRB33 X 12DP SG	28 23/32" x 3 5/8" x 12"
DRB36 X 12DP SG	31 23/32" x 3 5/8" x 12"
9" Deep	
DRB12 X 9DP SG	7 23/32" x 3 5/8" x 9"
DRB15 X 9DP SG	10 23/32" x 3 5/8" x 9"
DRB18 X 9DP SG	13 23/32" x 3 5/8" x 9"
DRB19 X 9DP SG	12 7/32" x 3 5/8" x 9"
DRB21 X 9DP SG	16 23/32" x 3 5/8" x 9"
DRB24 X 9DP SG	19 23/32" x 3 5/8" x 9"
DRB27 X 9DP SG	22 23/32" x 3 5/8" x 9"
DRB30 X 9DP SG	25 23/32" x 3 5/8" x 9"
DRB33 X 9DP SG	28 23/32" x 3 5/8" x 9"
DRB36 X 9DP SG	31 23/32" x 3 5/8" x 9"

DRAWER BODIES	
Part Name	Dimensions
Large "SG" Drawer Bodies	
21" Deep	
DRB12M X 21DP SG	7 23/32" x 7 3/4" x 21"
DRB15M X 21DP SG	10 23/32" x 7 3/4" x 21"
DRB18M X 21DP SG	13 23/32" x 7 3/4" x 21"
DRB21M X 21DP SG	16 23/32" x 7 3/4" x 21"
DRB24M X 21DP SG	19 23/32" x 7 3/4" x 21"
DRB27M X 21DP SG	22 23/32" x 7 3/4" x 21"
DRB30M X 21DP SG	25 23/32" x 7 3/4" x 21"
DRB33M X 21DP SG	28 23/32" x 7 3/4" x 21"
DRB36M X 21DP SG	31 23/32" x 7 3/4" x 21"
18" Deep	
DRB12M X 18DP SG	7 23/32" x 7 3/4" x 18"
DRB15M X 18DP SG	10 23/32" x 7 3/4" x 18"
DRB18M X 18DP SG	13 23/32" x 7 3/4" x 18"
DRB21M X 18DP SG	16 23/32" x 7 3/4" x 18"
DRB24M X 18DP SG	19 23/32" x 7 3/4" x 18"
DRB27M X 18DP SG	22 23/32" x 7 3/4" x 18"
DRB30M X 18DP SG	25 23/32" x 7 3/4" x 18"
DRB33M X 18DP SG	28 23/32" x 7 3/4" x 18"
DRB36M X 18DP SG	31 23/32" x 7 3/4" x 18"
15" Deep	
DRB12M X 15DP SG	7 23/32" x 7 3/4" x 15"
DRB15M X 15DP SG	10 23/32" x 7 3/4" x 15"
DRB18M X 15DP SG	13 23/32" x 7 3/4" x 15"
DRB21M X 15DP SG	16 23/32" x 7 3/4" x 15"
DRB24M X 15DP SG	19 23/32" x 7 3/4" x 15"
DRB27M X 15DP SG	22 23/32" x 7 3/4" x 15"
DRB30M X 15DP SG	25 23/32" x 7 3/4" x 15"
DRB33M X 15DP SG	28 23/32" x 7 3/4" x 15"
DRB36M X 15DP SG	31 23/32" x 7 3/4" x 15"
12" Deep	
DRB12M X 12DP SG	7 23/32" x 7 3/4" x 12"
DRB15M X 12DP SG	10 23/32" x 7 3/4" x 12"
DRB18M X 12DP SG	13 23/32" x 7 3/4" x 12"
DRB21M X 12DP SG	16 23/32" x 7 3/4" x 12"
DRB24M X 12DP SG	19 23/32" x 7 3/4" x 12"
DRB27M X 12DP SG	22 23/32" x 7 3/4" x 12"
DRB30M X 12DP SG	25 23/32" x 7 3/4" x 12"
DRB33M X 12DP SG	28 23/32" x 7 3/4" x 12"
DRB36M X 12DP SG	31 23/32" x 7 3/4" x 12"
9" Deep	
DRB12M X 9DP SG	7 23/32" x 7 3/4" x 9"
DRB15M X 9DP SG	10 23/32" x 7 3/4" x 9"
DRB18M X 9DP SG	13 23/32" x 7 3/4" x 9"
DRB21M X 9DP SG	16 23/32" x 7 3/4" x 9"
DRB24M X 9DP SG	19 23/32" x 7 3/4" x 9"
DRB27M X 9DP SG	22 23/32" x 7 3/4" x 9"
DRB30M X 9DP SG	25 23/32" x 7 3/4" x 9"
DRB33M X 9DP SG	28 23/32" x 7 3/4" x 9"

DRAWER BODIES	
Part Name	Dimensions
Standard "FD" Drawer Bodies	
21" Deep	
DRB12 X 21DP DT FD	8 1/16" x 3 1/2" x 21"
DRB15 X 21DP DT FD	11 1/16" x 3 1/2" x 21"
DRB18 X 21DP DT FD	14 1/16" x 3 1/2" x 21"
DRB19 X 21DP DT FD	15 9/16" x 3 1/2" x 21"
DRB21 X 21DP DT FD	17 1/16" x 3 1/2" x 21"
DRB24 X 21DP DT FD	20 1/16" x 3 1/2" x 21"
DRB27 X 21DP DT FD	23 1/16" x 3 1/2" x 21"
DRB30 X 21DP DT FD	26 1/16" x 3 1/2" x 21"
DRB33 X 21DP DT FD	29 1/16" x 3 1/2" x 21"
DRB36 X 21DP DT FD	32 1/16" x 3 1/2" x 21"
18" Deep	
DRB12 X 18DP DT FD	8 1/16" x 3 1/2" x 18"
DRB15 X 18DP DT FD	11 1/16" x 3 1/2" x 18"
DRB18 X 18DP DT FD	14 1/16" x 3 1/2" x 18"
DRB19 X 18DP DT FD	15 9/16" x 3 1/2" x 18"
DRB21 X 18DP DT FD	17 1/16" x 3 1/2" x 18"
DRB24 X 18DP DT FD	20 1/16" x 3 1/2" x 18"
DRB27 X 18DP DT FD	23 1/16" x 3 1/2" x 18"
DRB30 X 18DP DT FD	26 1/16" x 3 1/2" x 18"
DRB33 X 18DP DT FD	29 1/16" x 3 1/2" x 18"
DRB36 X 18DP DT FD	32 1/16" x 3 1/2" x 18"
15" Deep	
DRB12 X 15DP DT FD	8 1/16" x 3 1/2" x 15"
DRB15 X 15DP DT FD	11 1/16" x 3 1/2" x 15"
DRB18 X 15DP DT FD	14 1/16" x 3 1/2" x 15"
DRB19 X 15DP DT FD	15 9/16" x 3 1/2" x 15"
DRB21 X 15DP DT FD	17 1/16" x 3 1/2" x 15"
DRB24 X 15DP DT FD	20 1/16" x 3 1/2" x 15"
DRB27 X 15DP DT FD	23 1/16" x 3 1/2" x 15"
DRB30 X 15DP DT FD	26 1/16" x 3 1/2" x 15"
DRB33 X 15DP DT FD	29 1/16" x 3 1/2" x 15"
DRB36 X 15DP DT FD	32 1/16" x 3 1/2" x 15"
12" Deep	
DRB12 X 12DP DT FD	8 1/16" x 3 1/2" x 12"
DRB15 X 12DP DT FD	11 1/16" x 3 1/2" x 12"
DRB18 X 12DP DT FD	14 1/16" x 3 1/2" x 12"
DRB19 X 12DP DT FD	15 9/16" x 3 1/2" x 12"
DRB21 X 12DP DT FD	17 1/16" x 3 1/2" x 12"
DRB24 X 12DP DT FD	20 1/16" x 3 1/2" x 12"
DRB27 X 12DP DT FD	23 1/16" x 3 1/2" x 12"
DRB30 X 12DP DT FD	26 1/16" x 3 1/2" x 12"
DRB33 X 12DP DT FD	29 1/16" x 3 1/2" x 12"
DRB36 X 12DP DT FD	32 1/16" x 3 1/2" x 12"
9" Deep	
DRB12 X 9DP DT FD	8 1/16" x 3 1/2" x 9"
DRB15 X 9DP DT FD	11 1/16" x 3 1/2" x 9"
DRB18 X 9DP DT FD	14 1/16" x 3 1/2" x 9"
DRB19 X 9DP DT FD	15 9/16" x 3 1/2" x 9"
DRB21 X 9DP DT FD	17 1/16" x 3 1/2" x 9"
DRB24 X 9DP DT FD	20 1/16" x 3 1/2" x 9"
DRB27 X 9DP DT FD	23 1/16" x 3 1/2" x 9"
DRB30 X 9DP DT FD	26 1/16" x 3 1/2" x 9"
DRB33 X 9DP DT FD	29 1/16" x 3 1/2" x 9"
DRB36 X 9DP DT FD	32 1/16" x 3 1/2" x 9"

DRAWER BODIES	
Part Name	Dimensions
Large "FD" Drawer Bodies	
21" Deep	
DRB12M X 21DP DT FD	8 1/16" x 7" x 21"
DRB15M X 21DP DT FD	11 1/16" x 7" x 21"
DRB18M X 21DP DT FD	14 1/16" x 7" x 21"
DRB21M X 21DP DT FD	17 1/16" x 7" x 21"
DRB24M X 21DP DT FD	20 1/16" x 7" x 21"
DRB27M X 21DP DT FD	23 1/16" x 7" x 21"
DRB30M X 21DP DT FD	26 1/16" x 7" x 21"
DRB33M X 21DP DT FD	29 1/16" x 7" x 21"
DRB36M X 21DP DT FD	32 1/16" x 7" x 21"
18" Deep	
DRB12M X 18DP DT FD	8 1/16" x 7" x 18"
DRB15M X 18DP DT FD	11 1/16" x 7" x 18"
DRB18M X 18DP DT FD	14 1/16" x 7" x 18"
DRB21M X 18DP DT FD	17 1/16" x 7" x 18"
DRB24M X 18DP DT FD	20 1/16" x 7" x 18"
DRB27M X 18DP DT FD	23 1/16" x 7" x 18"
DRB30M X 18DP DT FD	26 1/16" x 7" x 18"
DRB33M X 18DP DT FD	29 1/16" x 7" x 18"
DRB36M X 18DP DT FD	32 1/16" x 7" x 18"
15" Deep	
DRB12M X 15DP DT FD	8 1/16" x 7" x 15"
DRB15M X 15DP DT FD	11 1/16" x 7" x 15"
DRB18M X 15DP DT FD	14 1/16" x 7" x 15"
DRB21M X 15DP DT FD	17 1/16" x 7" x 15"
DRB24M X 15DP DT FD	20 1/16" x 7" x 15"
DRB27M X 15DP DT FD	23 1/16" x 7" x 15"
DRB30M X 15DP DT FD	26 1/16" x 7" x 15"
DRB33M X 15DP DT FD	29 1/16" x 7" x 15"
DRB36M X 15DP DT FD	32 1/16" x 7" x 15"
12" Deep	
DRB12M X 12DP DT FD	8 1/16" x 7" x 12"
DRB15M X 12DP DT FD	11 1/16" x 7" x 12"
DRB18M X 12DP DT FD	14 1/16" x 7" x 12"
DRB21M X 12DP DT FD	17 1/16" x 7" x 12"
DRB24M X 12DP DT FD	20 1/16" x 7" x 12"
DRB27M X 12DP DT FD	23 1/16" x 7" x 12"
DRB30M X 12DP DT FD	26 1/16" x 7" x 12"
DRB33M X 12DP DT FD	29 1/16" x 7" x 12"
DRB36M X 12DP DT FD	32 1/16" x 7" x 12"
9" Deep	
DRB12M X 9DP DT FD	8 1/16" x 7" x 9"
DRB15M X 9DP DT FD	11 1/16" x 7" x 9"
DRB18M X 9DP DT FD	14 1/16" x 7" x 9"
DRB21M X 9DP DT FD	17 1/16" x 7" x 9"
DRB24M X 9DP DT FD	20 1/16" x 7" x 9"
DRB27M X 9DP DT FD	23 1/16" x 7" x 9"
DRB30M X 9DP DT FD	26 1/16" x 7" x 9"
DRB33M X 9DP DT FD	29 1/16" x 7" x 9"

DRAWER BODIES	
Part Name	Dimensions
2 Drawer Base	
DRB21 HD X 21DPDTFD	17 1/32" x 7" x 21"
DRB24 HD X 21DPDTFD	20 1/32" x 7" x 21"
DRB27 HD X 21DPDTFD	23 1/32" x 7" x 21"
DRB30 HD X 21DPDTFD	26 1/32" x 7" x 21"
DRB33 HD X 21DPDTFD	29 1/32" x 7" x 21"
DRB36 HD X 21DPDTFD	32 1/32" x 7" x 21"
Kneehole Drawer	
DRBKDC27X 15DP DT FD	16 23/32" x 2 11/32" x 15"
DRBKDC33X 15DP DT FD	22 23/32" x 2 11/32" x 15"
DRBKDC36X 15DP DT FD	28 23/32" x 2 11/32" x 15"
Miscellaneous	
DRB6 BSDC6	4 29/32" x 22 15/16" x 4 3/4"
DRB6 SDC30	4 29/32" x 10 15/16" x 4 3/4"
DRB6 SDC30	4 29/32" x 10 15/16" x 4 3/4"
DRB6 SDC30	4 29/32" x 10 15/16" x 4 3/4"
DRB6 SDC30	4 29/32" x 10 15/16" x 4 3/4"

GLASS INSERTS				
SKU	I, 28, 29, 30, 44, 47, 69, 74, 75	35, 54, 57, 58	39, 40, 42	P, 18, 19
12" WIDE				
DGI-1212	8" x 7 15/16"	6 5/16" x 6 3/8"	6 5/16" x 6 3/8"	6 5/16" x 6 3/8"
DGI-1212 BUTT	8" x 7 15/16"	6 9/16" x 6 3/8"	6 5/16" x 6 3/8"	7 3/8" x 6 3/8"
DGI-1215	8" x 10 15/16"	6 5/16" x 9 3/8"	6 5/16" x 9 3/8"	6 5/16" x 9 3/8"
DGI-1215 BUTT	8" x 10 15/16"	6 9/16" x 9 3/8"	6 5/16" x 9 3/8"	7 3/8" x 9 3/8"
DGI-1218	8" x 13 15/16"	6 5/16" x 12 3/8"	6 5/16" x 12 3/8"	6 5/16" x 12 3/8"
DGI-1218 BUTT	8" x 13 15/16"	6 9/16" x 12 3/8"	6 5/16" x 12 3/8"	7 3/8" x 12 3/8"
DGI-1224	8" x 20 5/16"	6 5/16" x 18 3/4"	6 5/16" x 18 3/4"	6 5/16" x 18 3/4"
DGI-1224 BUTT	8" x 20 5/16"	6 9/16" x 18 3/4"	6 5/16" x 18 3/4"	7 3/8" x 18 3/4"
DGI-1230	8" x 25 15/16"	6 5/16" x 24 3/8"	6 5/16" x 24 3/8"	6 5/16" x 24 3/8"
DGI-1230 BUTT	8" x 25 15/16"	6 9/16" x 24 3/8"	6 5/16" x 24 3/8"	7 3/8" x 24 3/8"
DGI-1236	8" x 31 15/16"	6 5/16" x 30 3/8"	6 5/16" x 30 3/8"	6 5/16" x 30 3/8"
DGI-1236 BUTT	8" x 31 15/16"	6 9/16" x 30 3/8"	6 5/16" x 30 3/8"	7 3/8" x 30 3/8"
DGI-1239	8" x 34 15/16"	6 5/16" x 33 3/8"	6 5/16" x 33 3/8"	6 5/16" x 33 3/8"
DGI-1239 BUTT	8" x 34 15/16"	6 9/16" x 33 3/8"	6 5/16" x 33 3/8"	7 3/8" x 33 3/8"
DGI-1242	8" x 37 15/16"	6 5/16" x 36 3/8"	6 5/16" x 36 3/8"	6 5/16" x 36 3/8"
DGI-1242 BUTT	8" x 37 15/16"	6 9/16" x 36 3/8"	6 5/16" x 36 3/8"	7 3/8" x 36 3/8"
13" WIDE				
DGI-1312 BUTT	9 1/2" x 7 15/16"	8 1/16" x 6 3/8"	7 13/16" x 6 3/8"	8 7/8" x 6 3/8"
DGI-1315 BUTT	9 1/2" x 10 15/16"	8 1/16" x 9 3/8"	7 13/16" x 9 3/8"	8 7/8" x 9 3/8"
DGI-1318 BUTT	9 1/2" x 13 15/16"	8 1/16" x 12 3/8"	7 13/16" x 12 3/8"	8 7/8" x 12 3/8"
DGI-1324 BUTT	9 1/2" x 20 5/16"	8 1/16" x 18 3/4"	7 13/16" x 18 3/4"	8 7/8" x 18 3/4"
DGI-1330 BUTT	9 1/2" x 25 15/16"	8 1/16" x 24 3/8"	7 13/16" x 24 3/8"	8 7/8" x 24 3/8"
DGI-1336 BUTT	9 1/2" x 31 15/16"	8 1/16" x 30 3/8"	7 13/16" x 30 3/8"	8 7/8" x 30 3/8"
DGI-1339 BUTT	9 1/2" x 34 15/16"	8 1/16" x 33 3/8"	7 13/16" x 33 3/8"	8 7/8" x 33 3/8"
DGI-1342 BUTT	9 1/2" x 37 15/16"	8 1/16" x 36 3/8"	7 13/16" x 36 3/8"	8 7/8" x 36 3/8"
15" WIDE				
DGI-1512	11" x 7 15/16"	9 5/16" x 6 3/8"	9 5/16" x 6 3/8"	9 5/16" x 6 3/8"
DGI-1512 BUTT	11" x 7 15/16"	9 9/16" x 6 3/8"	9 5/16" x 6 3/8"	10 3/8" x 6 3/8"
DGI-1515	11" x 10 15/16"	9 5/16" x 9 3/8"	9 5/16" x 9 3/8"	9 5/16" x 9 3/8"
DGI-1515 BUTT	11" x 10 15/16"	9 9/16" x 9 3/8"	9 5/16" x 9 3/8"	10 3/8" x 9 3/8"
DGI-1518	11" x 13 15/16"	9 5/16" x 12 3/8"	9 5/16" x 12 3/8"	9 5/16" x 12 3/8"
DGI-1518 BUTT	11" x 13 15/16"	9 9/16" x 12 3/8"	9 5/16" x 12 3/8"	10 3/8" x 12 3/8"
DGI-1521 BUTT	11" x 16 7/16"	9 9/16" x 14 7/8"	9 5/16" x 14 7/8"	10 3/8" x 14 7/8"
DGI-1524	11" x 20 5/16"	9 5/16" x 18 3/4"	9 5/16" x 18 3/4"	9 5/16" x 18 3/4"
DGI-1524 BUTT	11" x 20 5/16"	9 9/16" x 18 3/4"	9 5/16" x 18 3/4"	10 3/8" x 18 3/4"
DGI-1527 BUTT	11" x 22 15/16"	9 9/16" x 21 3/8"	9 5/16" x 21 3/8"	10 3/8" x 21 3/8"
DGI-1530	11" x 25 15/16"	9 5/16" x 24 3/8"	9 5/16" x 24 3/8"	9 5/16" x 24 3/8"
DGI-1530 BUTT	11" x 25 15/16"	9 9/16" x 24 3/8"	9 5/16" x 24 3/8"	10 3/8" x 24 3/8"
DGI-1536	11" x 31 15/16"	9 5/16" x 30 3/8"	9 5/16" x 30 3/8"	9 5/16" x 30 3/8"
DGI-1536 BUTT	11" x 31 15/16"	9 9/16" x 30 3/8"	9 5/16" x 30 3/8"	10 3/8" x 30 3/8"
DGI-1539	11" x 34 15/16"	9 5/16" x 33 3/8"	9 5/16" x 33 3/8"	9 5/16" x 33 3/8"
DGI-1539 BUTT	11" x 34 15/16"	9 9/16" x 33 3/8"	9 5/16" x 33 3/8"	10 3/8" x 33 3/8"
DGI-1542	11" x 37 15/16"	9 5/16" x 36 3/8"	9 5/16" x 36 3/8"	9 5/16" x 36 3/8"
DGI-1542 BUTT	11" x 37 15/16"	9 9/16" x 36 3/8"	9 5/16" x 36 3/8"	10 3/8" x 36 3/8"
16" WIDE				
DGI-1612 BUTT	12 1/2" x 7 15/16"	11 1/16" x 6 3/8"	10 13/16" x 6 3/8"	11 7/8" x 6 3/8"
DGI-1615 BUTT	12 1/2" x 10 15/16"	11 1/16" x 9 3/8"	10 13/16" x 9 3/8"	11 7/8" x 9 3/8"
DGI-1618 BUTT	12 1/2" x 13 15/16"	11 1/16" x 12 3/8"	10 13/16" x 12 3/8"	11 7/8" x 12 3/8"
DGI-1621 BUTT	12 1/2" x 16 7/16"	11 1/16" x 14 7/8"	10 13/16" x 14 7/8"	11 7/8" x 14 7/8"
DGI-1624 BUTT	12 1/2" x 20 5/16"	11 1/16" x 18 3/4"	10 13/16" x 18 3/4"	11 7/8" x 18 3/4"
DGI-1630 BUTT	12 1/2" x 25 15/16"	11 1/16" x 24 3/8"	10 13/16" x 24 3/8"	11 7/8" x 24 3/8"
DGI-1636 BUTT	12 1/2" x 31 15/16"	11 1/16" x 30 3/8"	10 13/16" x 30 3/8"	11 7/8" x 30 3/8"
DGI-1639 BUTT	12 1/2" x 34 15/16"	11 1/16" x 33 3/8"	10 13/16" x 33 3/8"	11 7/8" x 33 3/8"
DGI-1642 BUTT	12 1/2" x 37 15/16"	11 1/16" x 36 3/8"	10 13/16" x 36 3/8"	11 7/8" x 36 3/8"

GLASS INSERTS				
SKU	**I, 28, 29, 30, 44, 47, 69, 74, 75**	**35, 54, 57, 58**	**39, 40, 42**	**P, 18, 19**
18" WIDE				
DGI-1812	14" x 7 15/16"	12 5/16" x 6 3/8"	12 5/16" x 6 3/8"	12 5/16" x 6 3/8"
DGI-1812 BUTT	14" x 7 15/16"	12 9/16" x 6 3/8"	12 5/16" x 6 3/8"	13 3/8" x 6 3/8"
DGI-1815	14" x 10 15/16"	12 5/16" x 9 3/8"	12 5/16" x 9 3/8"	12 5/16" x 9 3/8"
DGI-1815 BUTT	14" x 10 15/16"	12 9/16" x 9 3/8"	12 5/16" x 9 3/8"	13 3/8" x 9 3/8"
DGI-1818	14" x 13 15/16"	12 5/16" x 12 3/8"	12 5/16" x 12 3/8"	12 5/16" x 12 3/8"
DGI-1818 BUTT	14" x 13 15/16"	12 9/16" x 12 3/8"	12 5/16" x 12 3/8"	13 3/8" x 12 3/8"
DGI-1821 BUTT	14" x 16 7/16"	12 9/16" x 14 7/8"	12 5/16" x 14 7/8"	13 3/8" x 14 7/8"
DGI-1824	14" x 20 5/16"	12 5/16" x 18 3/4"	12 5/16" x 18 3/4"	12 5/16" x 18 3/4"
DGI-1824 BUTT	14" x 20 5/16"	12 9/16" x 18 3/4"	12 5/16" x 18 3/4"	13 3/8" x 18 3/4"
DGI-1830	14" x 25 15/16"	12 5/16" x 24 3/8"	12 5/16" x 24 3/8"	12 5/16" x 24 3/8"
DGI-1830 BUTT	14" x 25 15/16"	12 9/16" x 24 3/8"	12 5/16" x 24 3/8"	13 3/8" x 24 3/8"
DGI-1836	14" x 31 15/16"	12 5/16" x 30 3/8"	12 5/16" x 30 3/8"	12 5/16" x 30 3/8"
DGI-1836 BUTT	14" x 31 15/16"	12 9/16" x 30 3/8"	12 5/16" x 30 3/8"	13 3/8" x 30 3/8"
DGI-1839	14" x 34 15/16"	12 5/16" x 33 3/8"	12 5/16" x 33 3/8"	12 5/16" x 33 3/8"
DGI-1839 BUTT	14" x 34 15/16"	12 9/16" x 33 3/8"	12 5/16" x 33 3/8"	13 3/8" x 33 3/8"
DGI-1842	14" x 37 15/16"	12 5/16" x 36 3/8"	12 5/16" x 36 3/8"	12 5/16" x 36 3/8"
DGI-1842 BUTT	14" x 37 15/16"	12 9/16" x 36 3/8"	12 5/16" x 36 3/8"	13 3/8" x 36 3/8"
18 1/2" WIDE				
DGI-18.512 BUTT	14 1/2" x 7 15/16"	13 1/16" x 6 3/8"	13 1/16" x 6 3/8"	13 13/16" x 6 3/8"
DGI-18.515 BUTT	14 1/2" x 10 15/16"	13 1/16" x 9 3/8"	13 1/16" x 9 3/8"	13 13/16" x 9 3/8"
DGI-18.518 BUTT	14 1/2" x 13 15/16"	13 1/16" x 12 3/8"	13 1/16" x 12 3/8"	13 13/16" x 12 3/8"
DGI-18.521 BUTT	14 1/2" x 16 7/16"	13 1/16" x 14 7/8"	13 1/16" x 14 7/8"	13 13/16" x 14 7/8"
DGI-18.524 BUTT	14 1/2" x 20 5/16"	13 1/16" x 18 3/4"	13 1/16" x 18 3/4"	13 13/16" x 18 3/4"
19" WIDE				
DGI-1912	15 1/2" x 7 15/16"	13 13/16" x 6 3/8"	13 13/16" x 6 3/8"	13 13/16" x 6 3/8"
DGI-1915	15 1/2" x 10 15/16"	13 13/16" x 9 3/8"	13 13/16" x 9 3/8"	13 13/16" x 9 3/8"
DGI-1918	15 1/2" x 13 15/16"	13 13/16" x 12 3/8"	13 13/16" x 12 3/8"	13 13/16" x 12 3/8"
DGI-1921	15 1/2" x 16 7/16"	13 13/16" x 14 7/8"	13 13/16" x 14 7/8"	13 13/16" x 14 7/8"
DGI-1924	15 1/2" x 20 5/16"	13 13/16" x 18 3/4"	13 13/16" x 18 3/4"	13 13/16" x 18 3/4"
DGI-1930	15 1/2" x 25 15/16"	13 13/16" x 24 3/8"	13 13/16" x 24 3/8"	13 13/16" x 24 3/8"
DGI-1936	15 1/2" x 31 15/16"	13 13/16" x 30 3/8"	13 13/16" x 30 3/8"	13 13/16" x 30 3/8"
DGI-1942	15 1/2" x 37 15/16"	13 13/16" x 36 3/8"	13 13/16" x 36 3/8"	13 13/16" x 36 3/8"
21" WIDE				
DGI-2112	17" x 7 15/16"	15 5/16" x 6 3/8"	15 5/16" x 6 3/8"	15 5/16" x 6 3/8"
DGI-2115	17" x 10 15/16"	15 5/16" x 9 3/8"	15 5/16" x 9 3/8"	15 5/16" x 9 3/8"
DGI-2118	17" x 13 15/16"	15 5/16" x 12 3/8"	15 5/16" x 12 3/8"	15 5/16" x 12 3/8"
DGI-2124	17" x 20 5/16"	15 5/16" x 18 3/4"	15 5/16" x 18 3/4"	15 5/16" x 18 3/4"
DGI-2130	17" x 25 15/16"	15 5/16" x 24 3/8"	15 5/16" x 24 3/8"	15 5/16" x 24 3/8"
DGI-2136	17" x 31 15/16"	15 5/16" x 30 3/8"	15 5/16" x 30 3/8"	15 5/16" x 30 3/8"
DGI-2139	17" x 34 15/16"	15 5/16" x 33 3/8"	15 5/16" x 33 3/8"	15 5/16" x 33 3/8"
DGI-2142	17" x 37 15/16"	15 5/16" x 36 3/8"	15 5/16" x 36 3/8"	15 5/16" x 36 3/8"

MISCELLANEOUS PARTS & ACCESSORIES

HINGES

Part Name	Description
HINGE 170 FRAMED	Door-to-frame hinge for BER, BSS, CAR or WER cabinet
HINGE ER	Hinge for BER, BSS, CAR or WER24 cabinet
PCSK HINGE	Center hinge for PCSK36
HINGE TILT OUT	Hinge for Factory Installed Tilt-Out Tray
HINGE FOL 6WY 45	6-Way Adjustable Full Overly (FOL) door hinge
HINGE SOL 6WY 45	6-Way Adjustable Standard Overlay (SOL) door hinge
HINGE FACEMOUNT 45	Hinge for facemount oven applications
HINGE FOL CC6WAY 45	6-Way Adjustable CushionClose Hinge for Windsor and Charleston door styles
HINGE FOL CC6WY 45DP	6-Way Adjustable CushionClose Hinge for Kinsdale (excluding Kinsdale Duraform), Beckley, New Haven, Corban, Sonoma, Sierra Vista, Lausanne and Maddox door styles
HINGE FOL CC6WY SAL	6-Way Adjustable CushionClose Hinge for Kinsdale Duraform
HINGE CCFACEMOUNT 45	Hinge with CushionClose for facemount oven applications
HINGE SOL CC6WAY 45	Hinge with 6-Way Adjustment and CushionClose for Barnett and Downing door styles
HINGE CC ANG RES CLP	Door Opening Angle Restriction Clip to 86 Degrees - for use on all Integrated CushionClose Hinges, excluding HINGE FOL CC6WY SAL (10 per pack)
HINGE CC RES CLP SAL	Door Opening Angle Restriction Clip to 86 Degrees - for use on HINGE FOL CC6WY SAL Hinges Only (10 per pack)
HINGE SPACER SHIM	Spaces Shim installed between the Hinge and Face Frame, adds inward left/right adjustment (for use on all hinges as needed)

GLIDES/TRACKS/CHANNELS FOR 24" DEEP BASE/DESK OR SLIDING SHELF

Part Name	Description
CHANNEL 21L	Left channel for 24" deep base/desk drawer and sliding shelf
CHANNEL 21R	Right channel for 24" deep base/desk drawer and sliding shelf
CHANNEL SS1 L	Left channel for sliding shelf
CHANNEL SS1R	Right channel for sliding shelf
GLIDE FD CCL24	Left CushionClose Glide
GLIDE FD CCR24	Right CushionClose Glide
GLIDE HD CCL24	Left CushionClose Glide for 2 Drawer Base
GLIDE HD CCR24	Right CushionClose Glide for 2 Drawer Base
GLIDE DROTCCL24	Left CushionClose glide for SDROT, CCBPPOK, SSK, CCROTDK
GLIDE DROTCCR24	Right CushionClose glide for SDROT, CCBPPOK, SSK, CCROTDK
TRACK GA 21L	Left track for 24" deep base/desk drawer and sliding shelf
TRACK GA 21R	Right track for 24" deep base/desk drawer and sliding shelf

GLIDES/TRACKS/CHANNELS FOR 21" DEEP VANITY/DESK

Part Name	Description
CHANNEL V L	Left channel for 21' deep Vanity/Desk
CHANNEL V R	Right channel for 21' deep Vanity/Desk
TRACK V L	Left track for 21' deep Vanity/Desk
TRACK V R	Right track for 21' deep Vanity/Desk
GLIDE FD CCL VAN21	Left CushionClose Glide for 21' deep Vanity/Desk
GLIDE FD CCR VAN21	Right CushionClose Glide for 21' deep Vanity/Desk
GLIDE DROTCCLVLC	Left full-extension CushionClose Vanity Linen Sliding Shelf Glide
GLIDE DROTCCRVLC	Right full-extension CushionClose Vanity Linen Sliding Shelf Glide

TRACKS/CHANNELS FOR 18" DEEP VANITY OR KNEEHOLE DRAWER CABINET

Part Name	Description
CHANNEL V 18L	Left channel for 18" deep Vanity or for Kneehole Drawer Cabinet
CHANNEL V 18R	Right channel for 18" deep Vanity or for Kneehole Drawer Cabinet
TRACK GA 16L	Left track for 18" deep Vanity or for Kneehole Drawer Cabinet
TRACK GA 16R	Right track for 18" deep Vanity or for Kneehole Drawer Cabinet

WHITE PLASTIC SPIN SHELVES AND PARTS

Part Name	Description
BSSCAR HUB RAS	With rollers, fits into shelf for pole attachment
BSSCWSCAR BRKT RAS	Top and bottom mounting brackets
BSSCWSCAR COLLAR ASM	Locking adjustable shelf collar for top shelf
BSSCWSCAR T-SHAFT RA	Metal post on which shelves spin (1 required)
BSS33 SHELF RAS	White spin shelf for BSS33/BSS3336/BSS3633 (2 required)
BSS36 SHELF RAS	White spin shelf for BSS36 (2 required)
BSS33 UNIT RAS	Complete spin unit for BSS33
BSS36 UNIT RAS	Complete spin unit for BSS36
CAR SHELF RAS	White spin shelf for CAR36 (2 required)
CAR36 UNIT RAS	Complete spin unit for CAR36
CBS SHELF RAS	White spin shelf for CBS36 (2 required)
CWS HUB RAS	With rollers, fits into shelf for pole attachment
CWS SHELF RAS	White spin shelf for CWS2430 (2 required)
CWS UNIT RAS	Complete plastic spin unit for CWS2430

WOOD SPIN SHELF UNITS - ALL PLYWOOD CONSTRUCTION

Part Name	Description
BSS33 SHELF WD NP PLY	Wood spin unit and plywood shelf for BSS33 WD
BSS3336 SHELF WD NP PLY	Wood spin unit and plywood shelf for BSS3336 WD
BSS36 SHELF WD NP PLY	Wood spin unit and plywood shelf for BSS36 WD
BSS3633 SHELF WD NP PLY	Wood spin unit and plywood shelf for BSS3633 WD
CBS SHELF WD NP PLY	Wood spin unit and plywood shelf for CBS36 WD
CWS24 SHLF WD NP MI	Wood spin unit and matching interior shelf for CWS__WD
CWS24 SHLF WD NP PLY	Wood spin unit and plywood shelf for CWS__WD
CWS24 SHELF WDNPMIPLY	Wood spin unit and matching interior plywood shelf for CWS__WD

MISCELLANEOUS PARTS & ACCESSORIES

CLIPS / BRACKETS

Part Name	Description
BRACKET CHAN B	Back bracket for side-mounted channels
BRACKET GLIDE HD BOT	Bottom bracket for 2 Drawer Base Cabinets
BRACKET GLIDE WB BOT	Bottom bracket for Wastebasket cabinets
BRACKET GL PBC L FG	Left back bracket for Peninsula Base Corner (PBC) full-extension hidden glide
BRACKET GL PBC R FG	Right back bracket for Peninsula Base Corner (PBC) full-extension hidden glide
BRACKET GL BD RDL FG	Left back bracket for any bottom drawer that uses the GLIDE FD CCL__ W/EXT (excluding PB, PBC, 2DB)
BRACKET GL BD RDR FG	Right back bracket for any bottom drawer that uses the GLIDE FD CCR__ W/EXT (excluding PB, PBC, 2DB)
BRACKET GL BD UNI FG	Left/right back bracket for any bottom drawer that uses the full-extension glide (excluding PB, PBC, 2DB)
BRACKET GL BD UNI FG	Left/right back bracket for any bottom drawer that use the GLIDE FD CC__ (excluding PB, PBC, 2DB)
BRACKET GL PB L FG	Left back bracket for Peninsula Base full-extension hidden glide
BRACKET GL PB R FG	Right back bracket for Peninsula Base full-extension hidden glide
BRACKET GL UD RDL FG	Left back bracket for any upper drawer(s) that uses the GLIDE FD CCL__ W/EXT (excluding PB, PBC, 2DB)
BRACKET GL UD RDR FG	Right back bracket for any upper drawer(s) that uses the GLIDE FD CCR__ W/EXT (excluding PB, PBC, 2DB)
BRACKET GL UD UNI FG	Left/right back bracket for any upper drawer(s) that use the GLIDE FD CC__ (excluding PB, PBC, 2DB)
BRACKET RED DP REAR	Back bracket for reduced depth side-mounted glide
CLIP HD DRB BACK L	Left back bracket for 2 Drawer Base cabinets
CLIP HD DRB BACK R	Right back bracket for 2 Drawer Base cabinets
CLIP DDF	Drawer front clip
CLIP MIRROR MCM FOL	Clip for MCM1530 full overlay Mirror door
CLIP MIRROR MCM SOL	Clip for MCM1530 standard overlay Mirror door
CLIP REAR SHELF	Middle shelf rest for 36" or wider ½" thick wall shelves OR 39" or wider ¾" thick wall shelves
CLIP SHELF NP SPIN	Locking shelf clip for NP Spin Units (Base 4 required, Wall 5 required)
DDF BRACKET FOL	DDF attachment bracket for Kinsdale, New Haven w/ DFO and Maddox w/ DFO door styles and FOL Wastebasket cabinets
DDF BRACKET CCAP FOL	Cover cap for DDF attachment bracket for Kinsdale, New Haven w/ DFO and Maddox w/ DFO door styles and FOL Wastebasket cabinets
DDF BRACKET SOL	DDF attachment bracket for Downing door styles and SOL wastebasket cabinets
DDF BRACKET CCAP SOL	Cover cap DDF attachment bracket for Downing door styles and SOL wastebasket cabinets
DDF BRACKET FOL OVEN	Oven DDF attachment bracket for Kinsdale, New Haven w/ DFO and Maddox w/ DFO door styles
DDF BKT CCAP FOL OVEN	Cover cap oven DDF attachment bracket for Kinsdale, New Haven w/ DFO and Maddox w/ DFO door styles
DDF BRACKET SOL OVEN	Oven DDF attachment bracket for Downing door styles
DDF BKT CCAP SOL OVEN	Cover cap oven DDF attachment bracket for Downing door styles
DRB HD MOUNT CLIP L	Left drawer release clip for 2 Drawer Base Cabinets
DRB HD MOUNT CLIP R	Right drawer release clip for 2 Drawer Base Cabinets
DRB WB MOUNT CLIP L	Left drawer release clip for Wastebasket Cabinets
DRB WB MOUNT CLIP R	Right drawer release clip for Wastebasket Cabinets
DROTFA MOUNT CLIP L	Left release clip for SDROT
DROTFA MOUNT CLIP R	Right release clip for SDROT
MOUNT BRACKET GA SS1	Bracket for side-mounted channels
SHELF SUPT ADJ BASE	Middle shelf rest for 36" or wider ½" thick base shelves OR 39" or wider ¾" thick base shelves
SPACER GL BD FRT FG	Left/right front drawer clip for bottom drawer on VDB__34H & DB__ cabinets (excluding 2DB)
SPACER GL KDC FRT FG	Left/right front drawer clip for KDC

SCREWS

Part Name	Description
SCREW BOLT EXT RD FG	Bolt for RD extender
SCREW BRACKET DDF	Screw to attach L bracket to DDF (Kinsdale and Downing door styles)
SCREW BRACKET DRB	Screw to attach L bracket to DRB (Kinsdale and Downing door styles)
SCREW CHANNEL	Channel installation screw (1 per channel)
SCREW DDF	Drawer front installation screw
SCREW DDF 5PC	Drawer front installation screw for 5-piece drawer fronts
SCREW DDF SDC	SDC drawer front installation screw (1 per drawer body)
SCREW EXTENDER RD	Screw for RD extender (1 per extender)
SCREW GLIDE FD	Screw that attaches glide brackets to front face frame of cabinet (qty 1 per glide)
SCREW HINGE/DR	Hinge-to-door screw (2 per door)
SCREW HINGE/FR	Hinge-to-frame screw (1 per hinge)
SCREW NUT EXT RD FG	Nut for RD extender
SCREW TRACK	Track installation screw (2 per track)

MISCELLANEOUS SHELVING

Part Name	Description
BS18 SHELF 1PK	Single Shelf for BS18__
BS18 SHELF 4PK	4 Pack Shelf Kit for BS18__
BS24 SHELF 1PK	Single Shelf for BS24__
BS24 SHELF 4PK	4 Pack Shelf Kit for BS24__
BS30 SHELF 1PK	Single Shelf for BS30__
BS30 SHELF 4PK	4 Pack Shelf Kit for BS30__
BS36 SHELF 1PK	Single Shelf for BS36__
BS36 SHELF 4PK	4 Pack Shelf Kit for BS36__
WCMSC2412 SHELF	Microwave shelf for WCMSC241236 BUTT
WCMSC2712 SHELF	Microwave shelf for WCMSC271236 BUTT
WMSC2712 SHELF	Microwave shelf for WMSC271236 BUTT
WMSC2718 SHELF	Microwave shelf for WMSC271836 BUTT
WMSC3012 SHELF	Microwave shelf for WMSC301236

MISCELLANEOUS PARTS & ACCESSORIES

MISCELLANEOUS	
Part Name	Description
BASE CORNER BLOCK WD	Plywood corner block
BFP3 FRONT FILLER	Filler for BFP3 CC Base Filler Pull Out
BFP6 FRONT FILLER	Filler for BFP6 CC Base Filler Pull Out
BPP9 KIT CC	Kit for BPP9 CC Base Pull Out
BPP12 KIT CC	Kit for BPP12 CC Base Pull Out
BPPUS9 KIT CC	Kit for BPPUS9 CC Base Pull Out Utensil Storage
BPPUS12 KIT CC	Kit for BPPUS12 CC Base Pull Out Utensil Storage
BTDP9 KIT CC	Kit for BTDP9 CC Base Tray Divider Pull Out
BTDP12 KIT CC	Kit for BTDP12 CC Base Pull Out
BUMPER CLEAR	Door bumper (Strip of 4 bumpers)
BUMPER CLEAR 55	Door bumper (Strip of 55 bumpers)
BUMPER CLEAR DWR	Drawer bumper (Strip of 4 bumpers)
BWBB15 FH FOL KIT	Wastebasket kit for FOL BWBB15 FH
BWBB15 FH SOL KIT	Wastebasket kit for SOL BWBB15 FH
BWBB15 FOL KIT	Wastebasket kit for FOL BWBB15
BWBB15 SOL KIT	Wastebasket kit for SOL BWBB15
BWBB15-2 FOL KIT	Wastebasket kit for FOL BWBB15-2
BWBB15-2 SOL KIT	Wastebasket kit for SOL BWBB15-2
BWBB18 FH FOL KIT	Wastebasket kit for FOL BWBB18 FH
BWBB18 FH SOL KIT	Wastebasket kit for SOL BWBB18 FH
BWBB18-2 FOL KIT	Wastebasket kit for FOL BWBB18-2
BWBB18-2 SOL KIT	Wastebasket kit for SOL BWBB18-2
BWBB21-2 FH FOL KIT	Wastebasket kit for FOL BWBB21-2 FH
BWBB21-2 FH SOL KIT	Wastebasket kit for SOL BWBB21-2 FH
BWBB21-2 FOL KIT	Wastebasket kit for FOL BWBB21-2
BWBB21-2 SOL KIT	Wastebasket kit for SOL BWBB21-2
CORNER BRACKET	Plastic corner block
COVER CAP 10MM TAN	Tan cover cap for cabinet backs
COVER CAP 10MM WHT	White cover cap for cabinet backs
DWBB1821 FOL KIT CC	Wastebasket kit for FOL DWBB1821
DWBB1821 SOL KIT CC	Wastebasket kit for SOL DWBB1821
DWBB1824 FOL KIT	Wastebasket kit for FOL DWBB1824
DWBB1824 SOL KIT	Wastebasket kit for SOL DWBB1824
DFDC FILE UNIT 21	File unit for DFDC1821
DFDC FILE UNIT 24	File unit for DFDC1824
FRAME SPACER BPP9	Unit stabilizer and frame spacer for BPP9 CC and BTDP9 CC
KNOB SDC	Wooden knob for SDC/BSDC6
LATCH TILT OUT TRAY	Latch for Factory Installed Tilt-Out Tray
MC SHELF HDW	Package of 4 shelf clips for MC/MCM cabinet
MIRROR TV3030	Mirror for TV3030
MIRROR TV3630	Mirror for TV3630
PDO21	Peg Dish Organizer for 21" 2 Drawer Base
PDO24	Peg Dish Organizer for 24" 2 Drawer Base
PDO27	Peg Dish Organizer for 27" 2 Drawer Base
PDO30	Peg Dish Organizer for 30" 2 Drawer Base
PDO33	Peg Dish Organizer for 33" 2 Drawer Base
PDO36	Peg Dish Organizer for 36" 2 Drawer Base
PEG KIT 4 PK	Package of 4 pegs for Peg Dish Organizer
PK36	Pilaster kit for PSK36 Shelf & Pilaster Kit
RHTRIM42	Outside corner molding for the Shiplap Box and Modern Box Range Hoods
ROT DIVIDER KIT	Divider for CCROTDK12/CCROTDK15
ROT PROTECTOR	End plastic protector on Sliding Shelves and Deep Dovetail Sliding Shelves
SDROT21	Scalloped Deep Sliding Shelf for 21" 2 Drawer Base
SDROT24	Scalloped Deep Sliding Shelf for 24" 2 Drawer Base
SDROT27	Scalloped Deep Sliding Shelf for 27" 2 Drawer Base
SDROT30	Scalloped Deep Sliding Shelf for 30" 2 Drawer Base
SDROT33	Scalloped Deep Sliding Shelf for 33" 2 Drawer Base
SDROT36	Scalloped Deep Sliding Shelf for 36" 2 Drawer Base
TRAY ST TILT OUT 11	Stainless Tray ONLY for Factory Installed Tilt-Out
TRAY ST TILT OUT 14	Stainless Tray ONLY for Factory Installed Tilt-Out
TRAY ST TILT OUT 24	Stainless Tray ONLY for Factory Installed Tilt-Out

MISCELLANEOUS	
Part Name	Description
TSFB	Furniture bracket for table skirting - ships with install screws
VWBB1834H FOL KIT CC	Wastebasket kit for FOL VWBB1834H
VWBB1834H SOL KIT CC	Wastebasket kit for SOL VWBB1834H
WASTEBASKET 27QT SLV	Silver 27 QT Wastebasket
WASTEBASKET 35QT SLV	Silver 35 QT Wastebasket
WASTEBASKET 50QT SLV	Silver 50 QT Wastebasket
WOOD SPIN HOLE PLUG	Plug for Wood Spin shelf
WTH DOOR STAY	One Door Stay for Wall Top Hinge cabinet (qty 2 per door)
WTH DR STAY DR BRK	One Door Bracket for WTH DOOR STAY (qty 2 per door)
WTH DR STAY FR BRK	One Frame bracket for WTH DOOR STAY (qty 2 per door)
WTH HEX KEY BAG	One Hex Key for WTH DOOR STAY

REPLACEMENT PARTS FOR 24" DEEP BASE AND DESK DRAWERS

WITH SIDE-MOUNTED GLIDES (N/A FOR KNEEHOLE DRAWERS)	
Part Name	Description
DRB__ X 21DP SG	Standard small drawer body for Portfolio
DRB__M X 21DP SG	Standard large drawer body for Portfolio
DRB__ X 18DP SG	Small drawer body used for Value Built
DRB__M X 18DP SG	Large drawer body used for Value Built
CHANNEL 21L	Left channel for drawer - attaches to cabinet (qty 1 per drawer)
CHANNEL 21R	Right channel for drawer - attaches to cabinet (qty 1 per drawer)
TRACK GA 21L	Left track for drawer - attaches to drawer body (qty 1 per drawer)
TRACK GA 21R	Right track for drawer - attaches to drawer body (qty 1 per drawer)
BRACKET CHAN B	Back bracket for channel - attaches channel to cabinet (qty 2 per drawer)
SPACER GL BD FRT FG	Bracket used on bottom drawers of Drawer Base Cabinets (qty 2 per drawer)
SCREW CHANNEL	Channel screw - attaches channel to face frame (qty 1 per drawer)
SCREW TRACK	Track screw - attaches track to drawer body (qty 2 per drawer)
WITH CUSHIONCLOSE GLIDES	
DRB__ X 21DP DT FD	Small drawer body - release clips attached
DRB__M X 21DP DT FD	Large drawer body - release clips attached
GLIDE FD CCL24	Left CushionClose Glide (qty 1 per drawer)
GLIDE FD CCR 24	Right CushionClose Glide (qty 1 per drawer)
BRACKET GL BD UNI FG	Back bracket for any bottom drawer (qty 2 per drawer)
BRACKET GL UD UNI FG	Back bracket for any upper drawer (qty 2 per drawer)
SCREW GLIDE FD	Screw to attach front clip for drawer (qty 2 per drawer)
DRB MOUNT CLIP L FD	Left drawer release clip for drawer glide - included with replacement drawer body (qty 1 per drawer)
DRB MOUNT CLIP R FD	Right drawer release clip for drawer glide - included with replacement drawer body (qty 1 per drawer)
SPACER GL KDC FRT FG	Drawer clip for front of KDC glide (2 per drawer)

REPLACEMENT PARTS FOR 24" DEEP FURNITURE DRAWERS

WITH CUSHIONCLOSE GLIDES	
Part Name	Description
DRB__ x 21DP DT FD	Small drawer body - release clips attached
DRB__M x 21DP DT FD	Large drawer body - release clips attached
GLIDE FD CCL24	Left CushionClose Glide (qty 1 per drawer)
GLIDE FD CCR 24	Right CushionClose Glide (qty 1 per drawer)
BRACKET GL UD UNI FG	Back bracket (qty 2 per drawer)
SPACER GL BD FRT FG	Spacer for BRACKET GL UD UNI FG (qty 2 per drawer)
SCREW GLIDE FD	Screw to attach front clip for drawer (qty 2 per drawer)
DRB MOUNT CLIP L FD	Left drawer release clip for drawer glide - included with replacement drawer body (qty 1 per drawer)
DRB MOUNT CLIP R FD	Right drawer release clip for drawer glide - included with replacement drawer body (qty 1 per drawer)

REPLACEMENT PARTS FOR TWO DRAWER BASE

WITH STANDARD CUSHIONCLOSE GLIDES	
Part Name	Description
DRB__ HD X 21DPDTFD	Drawer body - release clips attached
GLIDE HD CCL24	Left CushionClose Glide (qty 1 per drawer)
GLIDE HD CCR24	Right CushionClose Glide (qty 1 per drawer)
CLIP HD DRB BACK L	Left back bracket for drawer glide (qty 1 per drawer)
CLIP HD DRB BACK R	Right back bracket for drawer glide (qty 1 per drawer)
BRACKET GL HD BOT	Bottom bracket for glide (qty 2 per drawer)
SCREW GLIDE FD	Screw to attach front clip for drawer (qty 2 per drawer)
DRB HD MOUNT CLIP L	Left drawer release clip for drawer glide - included with replacement drawer body (qty 1 per drawer)
DRB HD MOUNT CLIP R	Right drawer release clip for drawer glide - included with replacement drawer body (qty 1 per drawer)

REPLACEMENT PARTS FOR 21" DEEP VANITY AND DESK DRAWERS

WITH SIDE-MOUNTED GLIDES	
Part Name	Description
DRB__ X 18DP SG	Small drawer body
DRB__M X 18DP SG	Large drawer body
CHANNEL V L	Left channel for drawer - attaches to cabinet (qty 1 per drawer)
CHANNEL V R	Right channel for drawer - attaches to cabinet (qty 1 per drawer)
TRACK V L	Left track for drawer - attaches to drawer body (qty 1 per drawer)
TRACK V R	Right track for drawer - attaches to drawer body (qty 1 per drawer)
BRACKET CHAN B	Back bracket for channel - attaches channel to cabinet (qty 2 per drawer)
SCREW CHANNEL	Channel screw - attaches channel to face frame (qty 1 per drawer)
SCREW TRACK	Track screw - attaches track to drawer body (qty 2 per drawer)
WITH CUSHIONCLOSE GLIDES	
DRB__ X 18DP DT FD	Small drawer body - release clips attached
DRB__M X 18DP DT FD	Large drawer body - release clips attached
GLIDE FD CCL VAN21	Left CushionClose Glide (qty 1 per drawer)
GLIDE FD CCR VAN21	Right CushionClose Glide (qty 1 per drawer)
BRACKET GL BD UNI FG	Back bracket for any bottom drawer (qty 2 per drawer)
BRACKET GL UD UNI FG	Back bracket for any upper drawer (qty 2 per drawer)
SCREW GLIDE FD	Screw to attach front clip for drawer (qty 2 per drawer)
DRB MOUNT CLIP L FD	Left drawer release clip for drawer glide - included with replacement drawer body (qty 1 per drawer)
DRB MOUNT CLIP R FD	Right drawer release clip for drawer glide - included with replacement drawer body (qty 1 per drawer)

REPLACEMENT PARTS FOR 12" DEEP FURNITURE DRAWERS

WITH CUSHIONCLOSE GLIDES	
Part Name	Description
DRB__ x 9DP DT FD	Small drawer body - release clips attached
DRB__M x 9DP DT FD	Large drawer body - release clips attached
GLIDE FD CCL12	Left CushionClose Glide (qty 1 per drawer)
GLIDE FD CCR12	Right CushionClose Glide (qty 1 per drawer)
BRACKET GL UD RDL FG	Left back bracket (qty 1 per drawer)
BRACKET GL UD RDR FG	Right back bracket (qty 1 per drawer)
SCREW GLIDE FD	Screw to attach front clip for drawer (qty 2 per drawer)
DRB MOUNT CLIP L FD	Left drawer release clip for drawer glide - included with replacement drawer body (qty 1 per drawer)
DRB MOUNT CLIP R FD	Right drawer release clip for drawer glide - included with replacement drawer body (qty 1 per drawer)

REPLACEMENT PARTS FOR FULL HEIGHT PULL-OUT CABINETS (BTDP/BPP/BPPUS)

WITH STANDARD CUSHIONCLOSE GLIDES	
Part Name	Description
BPP__ KIT CC	Kit for BPP__ CC Base Pull-Out (includes all installation items)
BPPUS__ KIT CC	Kit for BPPUS__ CC Base Pull-Out (includes all installation items)
BTDP__ KIT CC	Kit for BTDP__ CC Base Tray Divider Pull-Out (includes all installation items)
GLIDE FD CCL24	Left CushionClose Glide (qty 1 per pull-out)
GLIDE FD CCR 24	Right CushionClose Glide (qty 1 per pull-out)
LOCKING CLIP L	Left release clip used on 9" pull-out units (qty 1 per pull-out)
LOCKING CLIP R	Right release clip used on 9" pull-out units (qty 1 per pull-out)
DRB MOUNT CLIP L FD	Left release clip used on 12" pull-out units (qty 1 per pull-out)
DRB MOUNT CLIP R FD	Right release clip used on 12" pull-out units (qty 1 per pull-out)

REPLACEMENT PARTS FOR 18" DEEP VANITY/KNEEHOLE DRAWERS

WITH SIDE-MOUNTED GLIDES	
Part Name	Description
DRB__ X 15DP SG	Small drawer body
DRB__M X 15DP SG	Large drawer body
DRBKDC_X 15DP DT SG	Kneehole drawer body
CHANNEL V 18L	Left channel for drawer - attaches to cabinet (qty 1 per drawer)
CHANNEL V 18R	Right channel for drawer - attaches to cabinet (qty 1 per drawer)
TRACK GA 16L	Left track for drawer - attaches to drawer body (qty 1 per drawer)
TRACK GA 16R	Right track for drawer - attaches to drawer body (qty 1 per drawer)
BRACKET CHAN B	Back bracket for channel - attaches channel to cabinet (qty 2 per drawer)
SCREW CHANNEL	Channel screw - attaches channel to face frame (qty 1 per drawer)
SCREW TRACK	Track screw - attaches track to drawer body (qty 2 per drawer)
WITH CUSHIONCLOSE GLIDES	
DRB__ X 15DP DT FD	Small drawer body - release clips attached
DRB__M X 15DP DT FD	Large drawer body - release clips attached
DRBKDC_X 15DP DT FD	Kneehole drawer body - release clips attached
GLIDE FD CCL18	Left full-extension hidden glide (qty 1 per drawer)
GLIDE FD CCR 18	Right full-extension hidden glide (qty 1 per drawer)
BRACKET GL BD UNI FG	Back bracket for any bottom drawer (qty 2 per drawer)
BRACKET GL UD UNI FG	Back bracket for any upper drawer (qty 2 per drawer)
SCREW GLIDE FD	Screw to attach front clip for drawer (qty 2 per drawer)
DRB MOUNT CLIP L FD	Left drawer release clip for drawer glide - included with replacement drawer body (qty 1 per drawer)
DRB MOUNT CLIP R FD	Right drawer release clip for drawer glide - included with replacement drawer body (qty 1 per drawer)

REPLACEMENT PARTS FOR SLIDING SHELVES, BASE POT & PAN ORGANIZERS AND ROLL-OUT TRAY DIVIDER KITS

WITH FULL DEPTH WITH SIDE-MOUNTED GLIDES	
Part Name	Description
SSK_	Sliding Shelf Kit
CHANNEL SS1L	Left channel for sliding shelf - attaches to cabinet (qty 1 per drawer)
CHANNEL SS1R	Right channel for sliding shelf - attaches to cabinet (qty 1 per drawer)
TRACK GA 21L	Left track for sliding shelf - attaches to drawer body (qty 1 per drawer)
TRACK GA 21R	Right track for sliding shelf - attaches to drawer body (qty 1 per drawer)
BRACKET CHAN B	Back bracket for channel - attaches channel to cabinet (qty 2 per drawer)
SCREW CHANNEL	Channel screw - attaches channel to face frame (qty 1 per sliding shelf)
SCREW TRACK	Track screw - attaches track to drawer body (qty 2 per drawer)
WITH FULL DEPTH WITH CUSHIONCLOSE GLIDES	
SSK_	Sliding Shelf Kit (ships with ALL installation hardware)
GLIDE DROTCCL24	Left CushionClose Glide (qty 1 per sliding shelf)
GLIDE DROTCCR24	Right CushionClose Glide (qty 1 per sliding shelf)
SCREW GLIDE CC	Attachement screws for front brackets (2 per sliding shelf)
BRACKET GL B DROTUNI	Back bracket for drawer glide (qty 2 per sliding shelf)
BRACKETDROT FRT MTL	Front bracket for drawer glide - will ship with attachement screws (qty 2 per sliding shelf)
DROTFA MOUNT CLIP L	Left release clip for sliding shelf
DROTFA MOUNT CLIP R	Right release clip for sliding shelf

REPLACEMENT PARTS FOR WASTEBASKET CABINETS

WITH FULL-EXTENSION GLIDES	
Part Name	Description
BWBB___ _OL KIT	Base Bottom Mounted Wastebasket Kit (includes all installation items)
DWBB18__ _OL KIT	Desk Bottom Mounted Wastebasket Kit (includes all installation items)
VWBB1834H _OL KIT	Vanity Bottom Mounted Wastebasket Kit (includes all installation items)
GLIDE WB FAR24	Right Heavy Duty Glide for BWBB__, DWBB1824 (qty 1 per pullout)
GLIDE WB FAL24	Left Heavy Duty Glide for BWBB__, DWBB1824 (qty 1 per pullout)
SCREW GLIDE FD	Screw that attaches glide brackets to front face frame of cabinet (qty 1 per glide)
SCREW TRACK	Screw that attaches the door to the drawer box using "L" brackets (qty 2 per bracket)
SCREW BRACKET DDF	Attaches "L" bracket to drawer front (qty 2 per bracket)
SCREW BRACKET DRB	Attaches "L" bracket to drawer box (qty 2 per bracket)
BRACKET GLIDE WB BOT	Heavy Duty Glide Back Bracket - mounts to cabinet floor (qty 1 per glide)
DDF BRACKET FOL	Metal "L" bracket for FOL door attachment (qty 4 per door)
DDF BRACKET CCAP FOL	Plastic "L" bracket cover cap for DDF BRACKET FOL (qty 1 per bracket)
DDF BRACKET SOL	Metal "L" bracket for SOL door attachment (qty 4 per door)
DDF BRACKET CCAP SOL	Plastic "L" bracket cover cap for DDF BRACKET SOL (qty 1 per bracket)
WASTEBASKET 27QT SLV	Silver 27 QT Wastebasket
WASTEBASKET 35QT SLV	Silver 35 QT Wastebasket
WASTEBASKET 50QT SLV	Silver 50 QT Wastebasket

WITH CUSHIONCLOSE GLIDES	
BWBB___ _OL KIT	Base Bottom Mounted Wastebasket Kit (includes all installation items)
DWBB18__ _OL KIT	Desk Bottom Mounted Wastebasket Kit (includes all installation items)
VWBB1834H _OL KIT	Vanity Bottom Mounted Wastebasket Kit (includes all installation items)
GLIDE WB CCL24	Cushion Close Heavy Duty Glide for BWBB__, DWBB1824 (qty 1 per pullout)
GLIDE WB CCR24	Cushion Close Heavy Duty Glide for BWBB__, DWBB1824 (qty 1 per pullout)
GLIDE WB CCL21	Cushion Close Heavy Duty Glide for DWBB1821, VWBB1834H (qty 1 per pullout)
GLIDE WB CCR21	Cushion Close Heavy Duty Glide for DWBB1821, VWBB1834H (qty 1 per pullout)
SCREW GLIDE FD	Screw that attaches glide brackets to front face frame of cabinet (qty 1 per glide)
SCREW TRACK	Screw that attaches the door to the drawer box using "L" brackets (qty 2 per bracket)
SCREW BRACKET DDF	Attaches "L" bracket to drawer front (qty 2 per bracket)
SCREW BRACKET DRB	Attaches "L" bracket to drawer box (qty 2 per bracket)
BRACKET GLIDE WB BOT	Heavy Duty Glide Back Bracket - mounts to cabinet floor (qty 1 per glide)
DDF BRACKET FOL	Metal "L" bracket for FOL door attachment (qty 4 per door)
DDF BRACKET CCAP FOL	Plastic "L" bracket cover cap for DDF BRACKET FOL (qty 1 per bracket)
DDF BRACKET SOL	Metal "L" bracket for SOL door attachment (qty 4 per door)
DDF BRACKET CCAP SOL	Plastic "L" bracket cover cap for DDF BRACKET SOL (qty 1 per bracket)
WASTEBASKET 27QT SLV	Silver 27 QT Wastebasket
WASTEBASKET 35QT SLV	Silver 35 QT Wastebasket
WASTEBASKET 50QT SLV	Silver 50 QT Wastebasket

INDEX

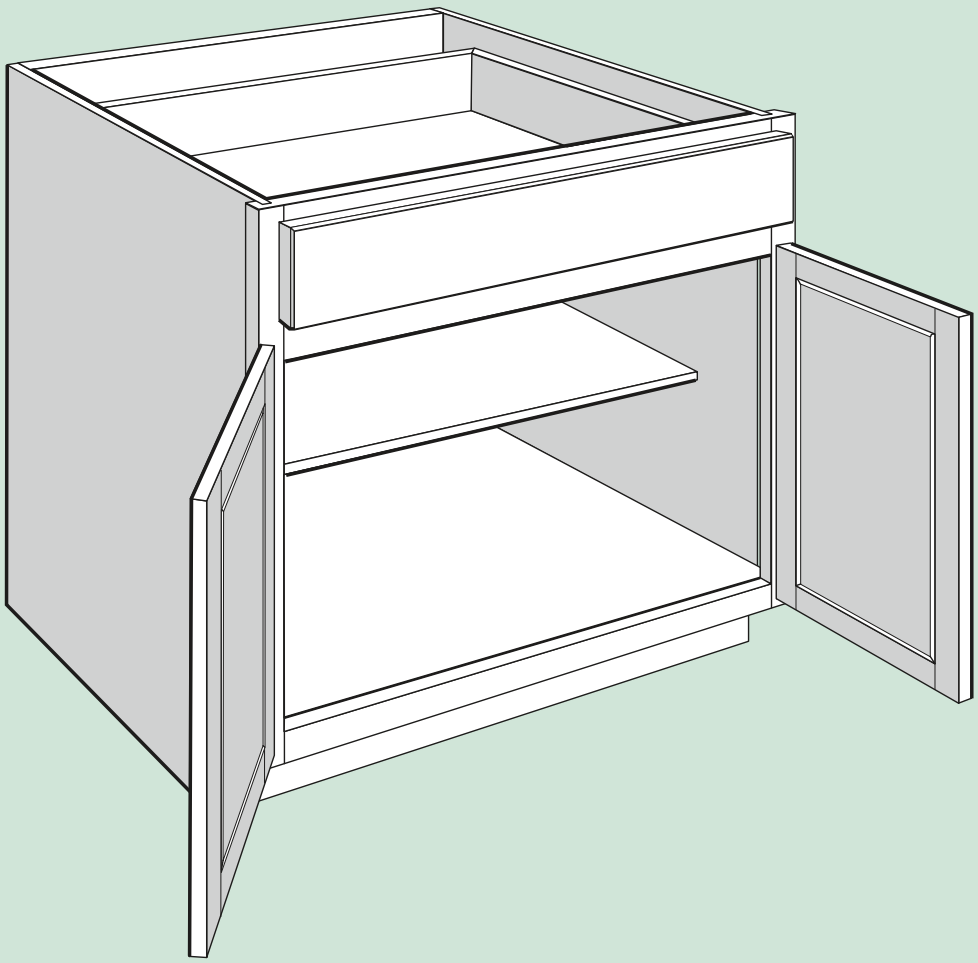

	Code	Page
1/2" Panel	WFP___	175
3-Sided Stock	S3S__	159
4-Sided Stock	S4S__	159

A

Accent Turned Foot	ATF	167
Adaptable Sink Base Kit	ASB___ KIT	109
Adjustable Drawer Divider Insert Kit, Large	ADDIK__	114
Adjustable Drawer Divider Insert Kit, Standard	ADIK__	114
Adjustable Shelf Kit	S/SK__	154
All Plywood Construction Option	APC	44
Angle Crown Molding	ACM8	156
Angled Corbel	AS12__	164
Angled Outside Corner Molding	AOSC8	160
Aria Foot	ARDF	166
Aria Leg	ARDL	166
Asymmetrical Base Easy Reach	BER__	99
Asymmetrical Base Super Susan with Wood Spin Units	BSS__ WD	100

B

Base Bookshelf	BS2434	123
Base Cabinet Construction	-	31
Base Cabinet Decorator Matching Doors	DMDB	177
Base Cabinet Dimensions	-	32
Base Cabinet Tray Divider Pull-Out	BTDP__ CC	91
Base Cabinet with 2 Doors Factory Installed Drawer Organizers	B__ BUTT __	88
Base Cabinet with Factory Installed Drawer Organizers	B__	86
Base Cabinet with Factory Installed Roll-Out Tray Divider	B__ CCROTD	84
Base Cabinet, 1 Factory Installed Wastebasket	BWBB15	85
Base Cabinet, 2 Factory Installed Wastebaskets	BWBB__-2	85
Base Cabinet, Standard with 2 Butt Doors	B__	86
Base Cabinet, Standard with Center Stile	B__	88
Base Cabinet, Standard with One Door	B__	84
Base Cabinet, with 2 Butt Doors and Sliding Shelves	B__ SS_	87
Base Cabinet, with Center Stile and Sliding Shelves	B__ SS_	89
Base Cabinet, with One Door and Sliding Shelves	B__ SS_	84
Base Column Filler	B_C__	183
Base Corner Filler	BCF27	180
Base Easy Reach	BER__	99
Base End Angle	BEA__ FH	111
Base Filler Pull-Out	BFP3CC	112
Base Locking Shelf Rest	-	35
Base Microwave Cabinet	BMC__	111
Base Mixer Lift Kit	BMLK18	116
Base Oven Cabinet Universal	BOCU__	112
Base Pantry Pull-Out	BPP__CC	92
Base Plumbing Skirt	BPS__UD	108
Base Pot & Pan Organizer Kit	BPPOKCC__	115
Base Spice Drawer Cabinet	BSDC6	110
Base Square Foot	BSQF	167
Base Square Leg	BSQL	167
Base Super Susan with Wood Spin Units	BSS__ WD	100
Base Tapered Leg	BTPL	167
Base Toe Kick	BTK8	184
Base Turned Leg	BTL	167
Base Utensil Storage Pull-Out	BPPUCC	91

	Code	Page
Base Wine Rack Cabinet	BWRC6	110
Batten Molding	BM8	160
Batten Molding - Builder	BM8 BLD	161
Blind Base Pull Out Kit	BLBPOK45	116
Blind Base Swing Out Kit	BLBSOK45_	116
Blind Corner Base Installation Chart	-	104
Blind Corner Base	BLB__	102, 103
Blind Corner Closure	BLC__	81
Blind Corner Closure	BLC1515	118
Blind Peninsula Corner Base	PBC__	98
Blind Wall Cabinet	BLW__	66
Blind Wall Cabinet Dimensions	-	67
Blind Wall Cabinet Installation Chart	-	67
Box Range Hood, Artisan	RH__ AWM	74
Box Range Hood, Modern Box	RH__ MB	74
Box Range Hood, Shiplap Box	RH__ SB	74
Box Range Hood, Sloped	RH__ SLWM	74
Built-In Microwave Cabinet	BBMC__	112

C

Cabinet Angle Molding	CAM8	160
Cabinet Care	-	28
Cabinet Front Only Option	CFO	48
Cabinet Specifications	-	27
Cabinet Tray Divider	TD3	117
Ceiling Height Requirements	-	36
Certification	-	26
Chair Rail Molding	CR8	157
Chantilly Decorative Leg	CDL	168
Chantilly Furniture Leg	CFL	168
Classic Baseboard Molding	CLBM8	158
Classic Trim Molding	CLTM8	158
Cleaning Caddy Pullout Kit	CCPOK	117
Cleat	HWC__	184
Construction Comparison Chart	-	45
Construction Option Examples	-	42
Construction Option Legend	-	42
Contemporary Trim Molding	CTM8	156
Corner Appliance Garage	AG__	72
Corner Base Carousel	CAR	101
Corner Base with Plastic Spin Shelves	CBS36	101
Corner Base with Wood Spin Units	CBS36 WD	101
Corner Sink Base	CSB36	105
Corner Sink Front	CSF__	110
Corner Wall Cabinets	CW__	68
Cover Caps	COVER CAP	184
Crown Molding - Builder	CM8 BLD	161
Crown Molding	CM8	156
Curved Corbel	CS12__	164
CushionClose Deep Dovetail Sliding Shelf Option	CCSS	46
CushionClose Glide Option	CCDW	46
CushionClose Hinge Option	CCH	46
Cutlery Divider Kit	CDAK__	113

	Code	Page
D		
Decorative Cove Molding	DCVM8	156
Decorative Glass Clips	CLIP DGI __	59
Decorative Hardware	-	187
Decorative Inside Corner Molding	ICM8	160
Decorative Mantel Range Hood	WRH__ DM	73
Decorative Trim Molding	DCTM8	156
Decorator Matching Doors	DMDBEA12	177
Deep Sink/Range Base Cabinet	DSB__	105
Desk Cabinet Decorator Matching Doors	DMDD__	177
Desk Cabinet Dimensions	-	33
Desk Cabinet with Wastebasket Pull-Out, 21" Deep	DWBB1821	120
Desk Cabinet with Wastebasket Pull-Out, 24" Deep	DWBB1824	120
Desk Door Cabinet, 21" Deep	DDO__21	120
Desk Door Cabinet, 24" Deep	DDO__24	120
Desk Drawer Cabinet, 21" Deep	DDR__21	121
Desk Drawer Cabinet, 24" Deep	DDR__24	121
Desk End Panel	DEP	124, 152, 172
Desk File Pull-Out Cabinet, 21" Deep	DFDC1821	121
Desk File Pull-Out Cabinet, 24" Deep	DFDC1824	121
Dishwasher Return	DWR3	172
Door Style Collections, Portfolio	-	10
Door Style Collections, Portfolio Select	-	4
Door Style Collections, Value Built	-	20
Double Oven Cabinet, No Drawer	OVD__ BUTT NDWR	138
Drawer Base Cabinet, 3 Drawers	DB__	95
Drawer Base Cabinet, 4 Drawers	DB__ 4DWR	95
Drawer Base Cabinet Dimensions	-	33
Drawer Upgrades	-	46
Drawer Work Surface	DWS21	114
Dummy Drawer Front Fastener	DDF FASTENER	185
E		
Era Foot	ERDF	166
Era Leg	ERDL	166
F		
Filler, Plain Box	WPB__	75
Finished Shelf	FS__	80
Finishing System Specifications	-	28
Floating Shelf	FLSH__	80, 124
Fluted Beaded Filler Extension	FBF E3__	180
Fluted Beaded Filler	FBF__	180
Full Depth Shelf Option	FDS	48
Full-Extension CushionClose Hidden Glides System	-	35
Full-Height Base Cabinet with Tray Divider and Shelf	TB9 TDS	90
Full-Height Base Cabinet, 1 Factory Installed Wastebasket	BWBB15 FH	92
Full-Height Base Cabinet, 2 Butt Doors	B__ FH	92
Full-Height Base Cabinet, 2 Factory Installed Wastebaskets	BWBB21-2 FH	92
Full-Height Base Cabinet, One Door	TB9/B__ FH	90
Full-Height Base with 2 Butt Doors and Sliding Shelves	B__ FH SS_	93
Full-Height Base with One Door and Sliding Shelves	B__ FH SS_	91
Full-Height Blind Corner Base	BLB__ FH	102

	Code	Page
Full-Height Peninsula Base	PB__ FH	97
Furniture Drawer Cabinet	FD__	93, 121, 152
Furniture Ends Option	FE	49
G		
Glass Insert	DGI__	58
Glass Shelf Kit	GSK__	81
Grooved End Panel	_EP__ GROOVED	174
H		
Hardware Specifications	-	35
Heat Shield Kit	HSK	118, 140
Hinge Restriction Clip	HINGE CC ANG RES CLP	185
Hinges	-	35
I		
Increased Depth Option	ID	48
Inset Light Rail Molding	ILR8	158
Inside Corner Molding - Builder	QM8 BLD	161
Inside Corner Molding	QM8	160
Installation Guidelines	-	37
Inverted Frame Option	IF	49
K		
Kneehole Drawer Cabinet	KDC__	122, 152
Knife Block Drawer Insert Kit	KBDIK__	114
L		
Large Classic Corbel	CLC212	164
Large Cove Molding	LCVM8	156
Large Crown Molding - Builder	LCM8 BLD	161
Large Era Corbel	ERC312	164
Large Finley Corbel	FC312	165
Large Narrow Cove Corbel	CC212	165
Large Prairie Corbel	PC312	165
Library Light Rail Molding	LBM8	158
M		
Matching Interior Option	MI	52
Medicine Cabinet	MC/MCM__	151
Medium Cove Corbel	CC49	165
Medium Narrow Cove Corbel	CC29	165
Medium Prairie Corbel	PC49	165
Metal Cove Corbel	METAL COVE 212__	165
Metal Emerson Corbel	METAL EMERSON 27__	166
Metal Shelf Rest	-	35
Microwave Wall	WMC__	65
Mirror Molding	MM8	157
Molding & Decorative Accents	-	155
Mullion Frame Door Profiles	MFD	56
Mullion Shelf Rest	-	35

	Code	Page
O		
Ogee Molding	OGE8	157
Ogee Pilaster Molding	OGP8	158
Open Frame Door Profiles	OFD	55
Outside Corner Molding - Builder	OCM8 BLD	161
Outside Corner Molding	OTCM8	160
Oven Cabinet, Single	OVS__	129
Overlay Dimensions	-	39
Overlay Filler	_OF__	181
Overlay Filler Profiles		182
P		
Panels, Fillers & Installation Items	-	171
Parker Decorative Foot	PDF	168
Parker Decorative	PDL	168
Parker Furniture Leg	PFL	168
Pedestal Drawer Cabinet	PD__	93
Peninsula Base Cabinet	PB__	97
Plain Box Filler	WPB__	183
Plywood Ends Option	PE	44
Plywood Panel	WP__	175
Pot & Pan Organizer Cabinet, 2 Butt Doors	B__ CCBPPO	87
Pot and Pan Organizer Cabinet, One Door	B__ CCBPPO	85
Premium Finish Cabinet Option	-	43
Putty Stick	PUTTY STICK	186
Q		
Quarter Round Molding	QR8	160
R		
Range Hood, Artisan	RH__ AWM	74
Range Hood Blower	RHVENT__	76
Range Hood Chimney, Plain	RHC__	75
Range Hood, Classic Tapered	RH__CT	73
Range Hood Liner, Straight Valance	RHLINER__ S	78
Range Hood Liner, Tapered	RHLINER__	78
Range Hood, Modern Box	RH__ MB	74
Range Hood, Raised Panel	RH__ RP	75
Range Hood, Shiplap Box	RH__ SB	74
Range Hood, Sloped	RH__ SLWM	74
Range Hood, Straight Valance	RH__ SV	75
Recessed Toe Kick Option	RTK	50
Reduced Depth Option	RD	47
Refrigerator Return Panel	RR__	172
Roll-Out Tray Divider Kit	ROTDKCC_	115
S		
Screws, Installation	SCREW	184
Scribe Molding - Builder	SM8 BLD	161
Scribe Molding	SM8	160
Scribe Molding	SM10	160
Shaker Accent Molding	SAM	159

	Code	Page
Shaker Chair Rail Molding	SQCR8	157
Shaker Insert Molding	SIM8	157
Shaker Mirror Molding	SMM8	157
Shelf, Adjustable	S/SK__	154
Shelf End Wall, Round Top and Bottom	SEW__	72
Shelf End Wall, Square Top and Bottom	SEW__ SQTB	72
Shelf End Wall, Square Top and Round Bottom	SEW__ SQT	72
Shelf, Floating	FLSH__	80, 124
Shelf Rests	SHELF REST	184
Shoe Molding	SHM8 DT	160
Side-Mounted Drawer Glides	-	35
Single Bead Accent Molding	SBAM8	159
Single Bead Insert Molding	SBIM8	157
Single Bead Molding	SBM8	159
Single Oven Cabinet, with 2 Butt Doors, 2 Large Drawers	OVS__ BUTT 2DDWR	135
Single Oven Cabinet, with 2 Butt Doors, 3 Drawers	OVS__ BUTT 3DWR	136
Single Oven Cabinet, with 2 Butt Doors, 4 Drawers	OVS__ BUTT 4DWR	137
Single Oven Cabinet, with 4 Butt Doors, 1 Drawer	OVS__ BUTT 1DWR	131
Single Oven Cabinet, with 4 Butt Doors, 1 Drawer & Pot & Pan Organizer	OVS__ BUTT 1DWR CCBPPO	132
Single Oven Cabinet, with 4 Butt Doors, 2 Drawers	OVS__ BUTT 2DWR	133
Single Oven Cabinet, with 4 Butt Doors, 2 Drawers, Pot & Pan Organizer	OVS__ BUTT 2DWR CCBPPO	134
Single Oven Cabinet, with Base Pot & Pan Organizer	OVS__ BUTT CCBPPO	130
Sink Base Door Storage Unit	SBDSU__	118
Sink Base Mat	SBMAT__	117
Sink Base Multi-Storage Cabinet	SBMSC__ BUTT STO	108
Sink Base Multi-Storage Shelf	SBMSS	117
Sink Base with One Factory Installed Tilt-Out Tray(s)	SB__ STO/TO	107
Sink/Cooktop Base Cabinet	SB__	106
Sink/Cooktop Front	SF__	109
Sink/Vanity Front Floor	FL__	173
Sink/Vanity Front Return	SFR	173
Sliding Shelf 4-Pack Kit	USS__4K	140, 154
Sliding Shelf Kit	SSK__	115, 123, 140, 154
Small Classic Corbel	CLC29	164
Small Cove Molding	SCVM8	156
Small Era Corbel	ERC49	164
Small Prairie Corbel	PC36	165
Small Single Bead Molding	SSBM8	159
Small Traditional Light Rail Molding	STLR8	158
Soffit Crown Molding	SCM8	156
Specialty Door Options	-	53
Spice Drawer Cabinet	SDC__	70
Spice Drawer Insert Kit	SDIAK__	113
Spice Rack Kit	SRK__	79
Split Post	SPLT POST80 P	169
Spray Stain	SPRAY STAIN	185
Square Inset Light Rail Molding	SQILR8	158
Stain	STAIN	186
Standard Cabinet Specifications		25
Starter Molding	STRM8	159
Stem Glass Holder	SGH36U	79
Storage Cube	SC__	70, 122
Straight Appliance Garage	AGS__	72

	Code	Page
T		
Table Skirting Furniture Bracket	TSFB	186
Tall Bookshelves	BS__	122
Tall Cabinet Decorator Matching Doors	DMDT__	178
Tall Cabinet Dimensions	-	34
Tall Cabinets	-	125
Tall Column Filler	T_C__	183
Tapered Foot	TPF	167
Tilt-Out Tray Kit	TO/STO TRAY__	118, 153
Touch Up Kit	TOUCHUP KIT	185
Touchup Marker	TU MARKER	186
Traditional Classic Crown Molding	TCCM8	156
Traditional Split Block	SPLT BLOCK26	169
Two Drawer Base Cabinet	DB__ 2DWR	94
U		
Universal Filler Extension	UF E3__	179
Universal Filler	UF__	179
Utility Cabinet, 12" Deep	UT__ 12 X __	126
Utility Cabinet, 12" Deep, with Adjustable Shelves	UT__ 12 X __ AS	127
Utility Cabinet, 24" Deep	UT__ 24 X __	126
Utility Cabinet, 24" Deep, with Adjustable Shelves	UT__ 24 X __ AS	127
Utility Cabinet, 24" Deep, with Sliding Shelves	UT__ 24 X __ 4SSK	128
V		
Valances	V__	162
Valet Cabinet	VC2436 BUTT	151
Vanity Adaptable Sink Base Kit	ASB__32 KIT	151
Vanity Base Cabinet with Wastebasket Pull-Out, 34 1/2" High	VWBB1834H	144
Vanity Base, One Door	VB__	144
Vanity Base, Two Butt Doors	VB__BUTT	144
Vanity Base with Full-Height Door, 34 1/2" High	VB__ 34H FH	145
Vanity Cabinet Decorator Matching Doors	DMDV	178
Vanity Cabinet Dimensions	-	33
Vanity Cabinets	-	143
Vanity Combo Sink Base, 31 1/8" High	VSDB__	149
Vanity Combo Sink Base, 34 1/2" High	VSDB3934H BK	149
Vanity Drawer Base, 31 1/8" High	VDB__	145
Vanity Drawer Base, 34 1/2" High	VDB__34H	145
Vanity Linen Cabinet	VLC__	153
Vanity Linen Cabinet, with Adjustable Shelves	VLC__ AS	153
Vanity Linen Cabinet, with Sliding Shelves	VLC__ 4SSK	154
Vanity Plumbing Skirt	VPS__ UD	150
Vanity Sink Base, 31 1/8" High	VSB/VAN__	146
Vanity Sink Base, 34 1/2" High	VSB/VAN__34H	146
Void Door Option	VDO__	51
Void To Kick Option	VTK	50
Void Top Drawer Option	VTD	51

	Code	Page
W		
Wall Bookshelves	BS__	123
Wall Cabinet Construction	-	30
Wall Cabinet Decorator Matching Doors	DMDW__	178
Wall Cabinet Dimensions	-	32
Wall Cabinet, Standard	W__	62
Wall Cabinet with Spice Rack	W__ SR	64
Wall Column Filler	W_C__	183
Wall Easy Reach	WER__	70
Wall End Angle Cabinet	WEA12__	69
Wall Microwave Cabinet, with Shelf	WMSC__	65
Wall Range Hood, Classic Tapered	WRH__ CT	73
Wall Range Hood, Decorative Mantle	WRH__ DM	73
Wall Range Hood, Raised Panel	WRH__ RP	73
Wall Range Hood, Straight Valance	WRH__ SV	73
Wall Top Hinge Cabinet	WTH__	64
Wide Batten Molding	WBM8	160
Wine Rack Cabinet	WRC__	71
Wine Rack	WR36	79
Wine Storage Cabinet	WSC__	71
Wood End Panel	_EP__	174
Wood Species & Materials Specification	-	29
Wood Tall End Panel	WTEP__	175
Wood Tiered Cutlery Divider Kit	WTCDKFD__	113

Timberlake Cabinetry® Portfolio Select® & Portfolio®

Limited 5-Year Warranty

The manufacturer of Timberlake cabinetry warrants to the original residential or commercial purchaser that all Timberlake cabinetry, cabinets, and accessories, are free from defects in materials and workmanship for the following durations, subject to the limitations set forth below:

Original residential purchaser: An "original residential purchaser" is defined as any person who purchases the cabinetry for personal use in his or her private residence. The duration of this limited warranty is five years from the date of the product delivery to the location. "Residential purchaser" extends to any person who owns and resides in the residence where the cabinetry is installed, for whom the cabinetry is purchased by a contractor, remodeler or other person/entity, except in commercial applications defined below.

Original commercial purchaser: An "original commercial purchaser" is any person or entity, including but not limited to landlords, leasing companies, contractors, remodelers, and private or public businesses, who purchases the cabinetry for installation and use in in any location that will be leased or used as a rental unit, or used for any other commercial or industrial application. The duration of this limited warranty is one year from the date of the product delivery to the location.

Proof of purchase is required. This limited warranty is expressly limited to repair or replacement of the cabinetry at the discretion of the manufacturer. This limited warranty does not include labor costs for removal, repairs, installation, or replacement.

This limited warranty does not cover defects, damage, or failure caused by improper handling, cleaning, installation, storage, assembly or disassembly, intentional damage, unauthorized product modifications and repairs, exposure to the elements including extreme humidity, moisture, or temperatures which may result in warping, splitting, or finish failure, accidental misuse, abuse, or negligence. Humidity levels in the home with cabinetry outside the range of 30-50% and temperature levels outside the range of 50-85°F are considered extreme.

Natural woods may vary in texture, color, and wood grain, and exhibit subtle changes as they age. For example, wood joints may develop visible cracking around the joint area and cabinet colors may darken or lighten over time.

Sunlight, smoke, moisture, household cleaners and other environmental conditions may cause materials to vary from their original color and/or to warp, split or crack. These variations are considered to be the nature of the material in relation to its environmental exposure and are not covered under this limited warranty.

THE MANUFACTURER OF TIMBERLAKE CABINETRY MAKES NO OTHER WARRANTIES OTHER THAN THOSE SET FORTH HEREIN AND ALL OTHER WARRANTIES ARE HEREBY DISCLAIMED.

THE IMPLIED WARRANTIES OF MERCHANTABILITY AND FITNESS FOR A PARTICULAR PURPOSE ARE LIMITED IN DURATION TO THE LENGTH OF THE LIMITED WARRANTY PERIOD.

THE LIMITED WARRANTIES SET FORTH HEREIN ARE LIMITED TO THE FIRST AND ORIGINAL BUYER AND ARE NOT TRANSFERABLE THEREAFTER. PROOF OF PURCHASE IS REQUIRED TO DETERMINE ELIGIBILITY.

EXCEPT AS PROVIDED IN THIS LIMITED WARRANTY AND TO THE MAXIMUM EXTENT PERMITTED BY LAW, THE MANUFACTURER OF TIMBERLAKE CABINETRY SHALL NOT BE LIABLE FOR INCIDENTAL, DIRECT, INDIRECT, CONSEQUENTIAL, OR SPECIAL DAMAGES TO THE PURCHASER OR TO ANY THIRD PARTY RESULTING FROM ANY BREACH OF WARRANTY OR CONDITION, OR UNDER ANY OTHER LEGAL THEORY, INCLUDING BUT NOT LIMITED TO: LOSS OF USE, LOST PROFITS, LOSS OF BUSINESS OPPORTUNITY, LOSS OF PROPERTY, OR OTHER ECONOMIC LOSSES. THE FOREGOING LIMITATION SHALL NOT APPLY TO PERSONAL INJURY CLAIMS OR ANY STATUTORY LIABILITY FOR INTENTIONAL AND GROSS NEGLIGENT ACTS AND/OR OMISSIONS.

Additional Exclusions, Limitations and Disclaimers

This limited warranty limits the coverage period for the following components that were not manufactured by American Woodmark:

Range hood blowers and components – one year from the date of delivery

SOME STATES DO NOT ALLOW THE EXCLUSION OR LIMITATION OF INCIDENTAL OR CONSEQUENTIAL DAMAGES, OR LIMITATIONS ON HOW LONG AN IMPLIED WARRANTY LASTS, SO THE ABOVE LIMITATIONS AND EXCLUSIONS MAY NOT APPLY TO YOU.

THIS WARRANTY GIVES YOU SPECIFIC LEGAL RIGHTS, AND YOU MAY ALSO HAVE OTHER RIGHTS, WHICH VARY FROM STATE TO STATE.

Claims

All claims under this limited warranty must be submitted to the manufacturer and must specify the defects present in the cabinets and accessories. Photos or samples of the product may be required to determine coverage.

After the manufacturer has had an opportunity to inspect the cabinets and/or accessories, it will, at its discretion, ship at no cost to the customer, replacement cabinets and/or parts necessary for repair. Products may require chemical or function testing to determine resolution of a warranty claim. Replacement products are subject to availability and may differ from those originally supplied.

Submit all claims to TIMBERLAKE CABINETRY at Post Office Box 1980, Winchester, Virginia 22604, 800-967-9674.

Timberlake Cabinetry® Value Built®

Limited 2-Year Warranty

The manufacturer of Timberlake cabinetry warrants to the original residential or commercial purchaser that all Timberlake cabinetry, cabinets, and accessories, are free from defects in materials and workmanship for the following durations, subject to the limitations set forth below:

Original residential purchaser: An "original residential purchaser" is defined as any person who purchases the cabinetry for personal use in his or her private residence. The duration of this limited warranty is two years from the date of the product delivery to the location. "Residential purchaser" extends to any person who owns and resides in the residence where the cabinetry is installed, for whom the cabinetry is purchased by a contractor, remodeler or other person/entity, except in commercial applications defined below.

Original commercial purchaser: An "original commercial purchaser" is any person or entity, including but not limited to landlords, leasing companies, contractors, remodelers, and private or public businesses, who purchases the cabinetry for installation and use in in any location that will be leased or used as a rental unit, or used for any other commercial or industrial application. The duration of this limited warranty is one year from the date of the product delivery to the location.

Proof of purchase is required. This limited warranty is expressly limited to repair or replacement of the cabinetry at the discretion of the manufacturer. This limited warranty does not include labor costs for removal, repairs, installation, or replacement.

This limited warranty does not cover defects, damage, or failure caused by improper handling, cleaning, installation, storage, assembly or disassembly, intentional damage, unauthorized product modifications and repairs, exposure to the elements including extreme humidity, moisture, or temperatures which may result in warping, splitting, or finish failure, accidental misuse, abuse, or negligence. Humidity levels in the home with cabinetry outside the range of 30-50% and temperature levels outside the range of 50-85°F are considered extreme.

Natural woods may vary in texture, color, and wood grain, and exhibit subtle changes as they age. For example, wood joints may develop visible cracking around the joint area and cabinet colors may darken or lighten over time.

Sunlight, smoke, moisture, household cleaners and other environmental conditions may cause materials to vary from their original color and/or to warp, split or crack. These variations are considered to be the nature of the material in relation to its environmental exposure and are not covered under this limited warranty.

THE MANUFACTURER OF TIMBERLAKE CABINETRY MAKES NO OTHER WARRANTIES OTHER THAN THOSE SET FORTH HEREIN AND ALL OTHER WARRANTIES ARE HEREBY DISCLAIMED.

THE IMPLIED WARRANTIES OF MERCHANTABILITY AND FITNESS FOR A PARTICULAR PURPOSE ARE LIMITED IN DURATION TO THE LENGTH OF THE LIMITED WARRANTY PERIOD.

THE LIMITED WARRANTIES SET FORTH HEREIN ARE LIMITED TO THE FIRST AND ORIGINAL BUYER AND ARE NOT TRANSFERABLE THEREAFTER. PROOF OF PURCHASE IS REQUIRED TO DETERMINE ELIGIBILITY.

EXCEPT AS PROVIDED IN THIS LIMITED WARRANTY AND TO THE MAXIMUM EXTENT PERMITTED BY LAW, THE MANUFACTURER OF TIMBERLAKE CABINETRY SHALL NOT BE LIABLE FOR INCIDENTAL, DIRECT, INDIRECT, CONSEQUENTIAL, OR SPECIAL DAMAGES TO THE PURCHASER OR TO ANY THIRD PARTY RESULTING FROM ANY BREACH OF WARRANTY OR CONDITION, OR UNDER ANY OTHER LEGAL THEORY, INCLUDING BUT NOT LIMITED TO: LOSS OF USE, LOST PROFITS, LOSS OF BUSINESS OPPORTUNITY, LOSS OF PROPERTY, OR OTHER ECONOMIC LOSSES. THE FOREGOING LIMITATION SHALL NOT APPLY TO PERSONAL INJURY CLAIMS OR ANY STATUTORY LIABILITY FOR INTENTIONAL AND GROSS NEGLIGENT ACTS AND/OR OMISSIONS.

Additional Exclusions, Limitations and Disclaimers

This limited warranty limits the coverage period for the following components that were not manufactured by American Woodmark:

Range hood blowers and components – one year from the date of delivery

SOME STATES DO NOT ALLOW THE EXCLUSION OR LIMITATION OF INCIDENTAL OR CONSEQUENTIAL DAMAGES, OR LIMITATIONS ON HOW LONG AN IMPLIED WARRANTY LASTS, SO THE ABOVE LIMITATIONS AND EXCLUSIONS MAY NOT APPLY TO YOU.

THIS WARRANTY GIVES YOU SPECIFIC LEGAL RIGHTS, AND YOU MAY ALSO HAVE OTHER RIGHTS, WHICH VARY FROM STATE TO STATE.

Claims

All claims under this limited warranty must be submitted to the manufacturer and must specify the defects present in the cabinets and accessories. Photos or samples of the product may be required to determine coverage.

After the manufacturer has had an opportunity to inspect the cabinets and/or accessories, it will, at its discretion, ship at no cost to the customer, replacement cabinets and/or parts necessary for repair. Products may require chemical or function testing to determine resolution of a warranty claim. Replacement products are subject to availability and may differ from those originally supplied.

Submit all claims to TIMBERLAKE CABINETRY at Post Office Box 1980, Winchester, Virginia 22604, 800-967-9674.

Notes

Notes

Notes

TIMBERLAKE
CABINETRY

P.O. Box 1980, Winchester, Virginia 22604
www.Timberlake.com

©2025 American Woodmark Corporation | 05/25 TBL98768 4M